Air Management System

Sustainability – Condition Based Maintenance - Digitalization

CE UKCA cULus *1 RoHS

*1 Refer to the "How to Order" page of each series for details on compliant models.

Monitors the machine standby conditions (when production stops) and automatically decreases the pressure. Reduces unnecessary air consumption

Standby regulator

Switch pressure between operation and standby

Air management hub

Flow rate, pressure, and temperature sensing
Communication function

Residual pressure relief valve

Secondary air supply or shut-off (exhaust) switching

Wireless adapter

(Accessories p. 47)

Air consumption: Max. 62%*1 reduction

p. 1

*1 In SMC conditions:
Maximum reduction ratio within product specifications
(at 0.7 MPa operating pressure and 0.2 MPa low pressure)

Compatible with OPC UA

p. 2

Direct connection enables data communications.

Compatible with PROFINET EtherNet/IP and EtherCAT

Compatible with SMC wireless systems

p. 3

- Communication cables not required
- High security using unique encryption
- Communication distance: Max. 100 m

New

- EtherCAT has been added as a communication protocol.
- Made to order added. p. 56
  - Without residual pressure relief 3-port solenoid valve specification (-X101)
  - Without standby regulator specification (-X102)

Video

AMS20/30/40/60 Series

SMC

CAT.ES100-155C

Why not reduce the wasted air generated by your factory equipment?

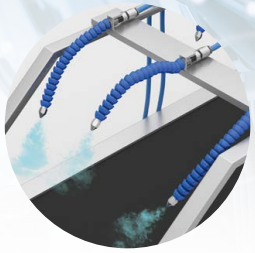

Blow and purge in equipment standby

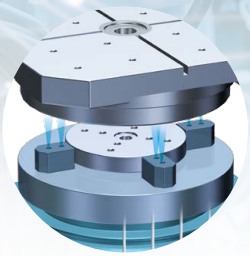

Leakage from piping connections due to poor piping installation

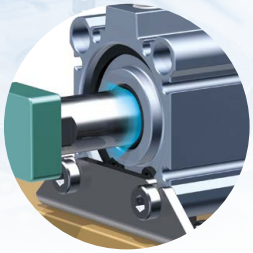

Leakage from cylinder due to worn seals

Reduce air consumption by lower pressure during equipment standby Standby mode

Example Under equipment operating conditions: Pressure 0.5 MPa, air consumption 1800 L/min and idle air consumption 200 L/min, then Standby Mode can apply low pressure setting 0.2 MPa to equipment.

>>>>>>>>>>>>>>> Transition of equipment operating status >>>>>>>>>>>>>>>

Machine operating	Equipment standby status (before/after process stoppage, break time, during production stoppage, etc.)		Machine operating
	Standby status being determined.	Standby mode	

Monitoring machine condition

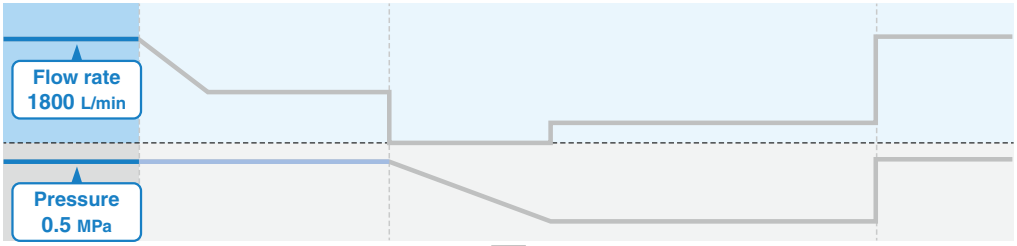

Detects decrease of flow during equipment standby

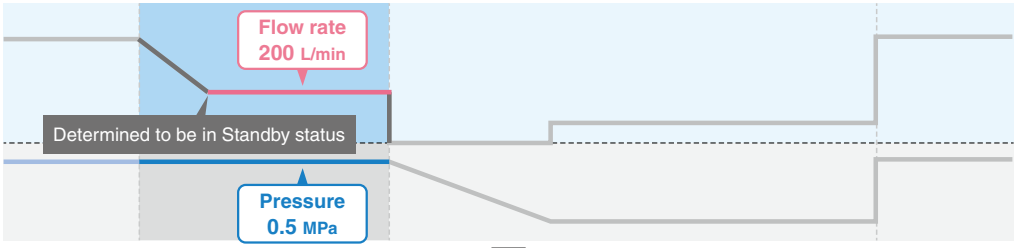

Provides minimum required pressure during standby to reduce air consumption

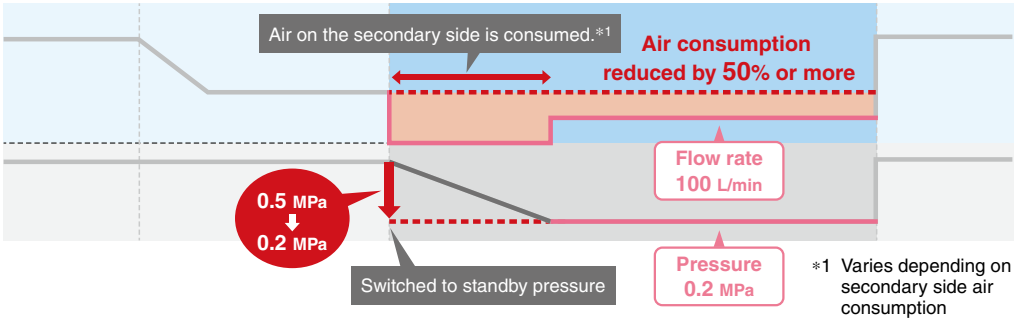

*1 Varies depending on secondary side air consumption

Reduce air consumption by shutting off valves depending on equipment shutdown conditions Isolation mode

Residual pressure exhaust valve allows further reduction of air consumption by shutting off the air supply.
Automatic isolation mode is also provided that can be turned off after a set time from standby mode.

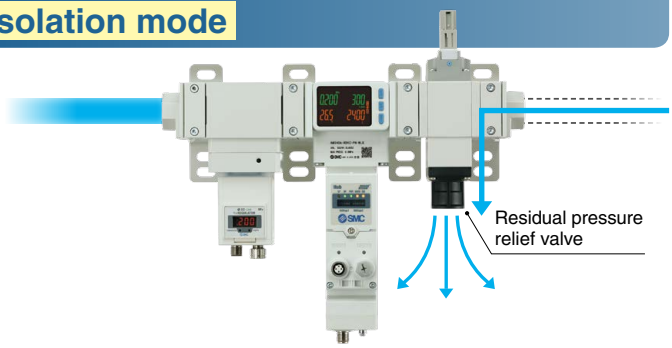

Visualization of production equipment status

Flow, pressure, temperature, and other sensor information can be communicated to the host system via Industrial Ethernet or the OPC UA data communication protocol.

Equipment status can be monitored from another location or from outside the office.

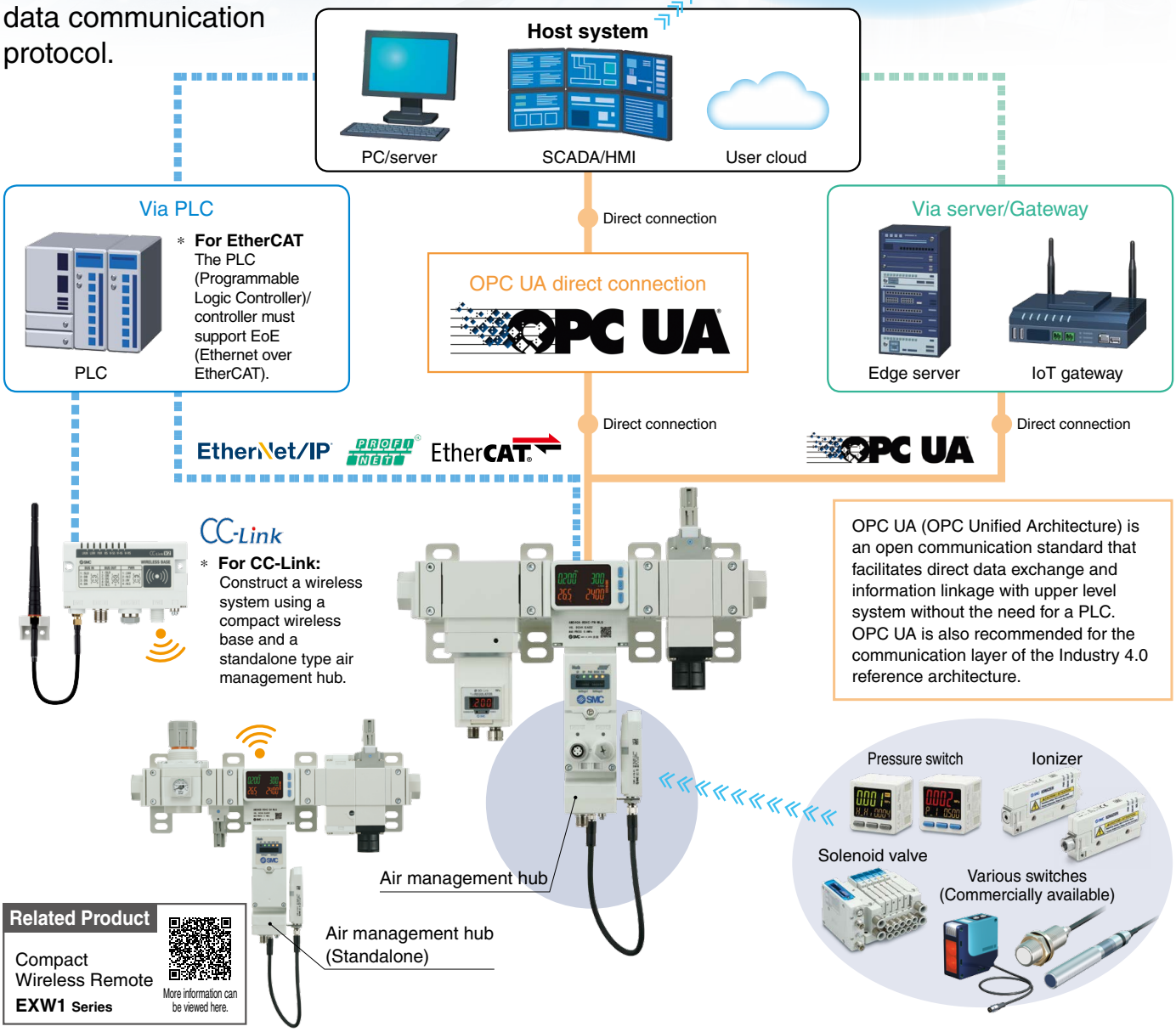

Related Product

Compact Wireless Remote **EXW1 Series**

More information can be viewed here.

IO-Link compatible

IO-Link port on the back of the air management hub

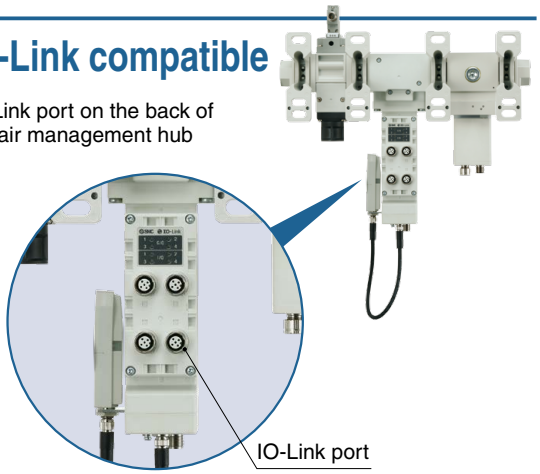

Examples of IoT applications with Air Management System

Remote monitoring and control is possible.

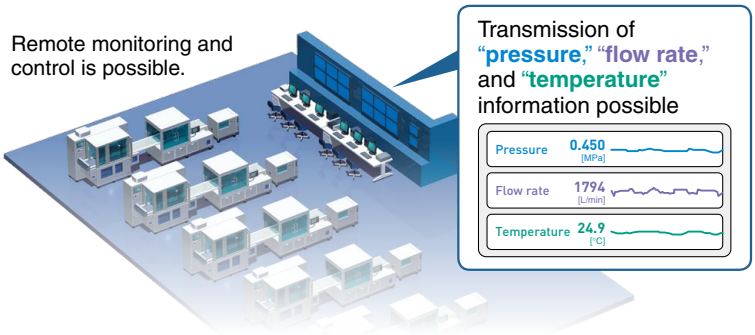

Compatible with SMC wireless systems*1

*1 When connecting a wireless adapter (sold separately)

- No communication cable required between the base and remote
  Reduced wiring work, space, and cost
  Minimized disconnection risk
- Connectivity to up to 10 remotes (AMS20/30/40/60 or compact wireless module)

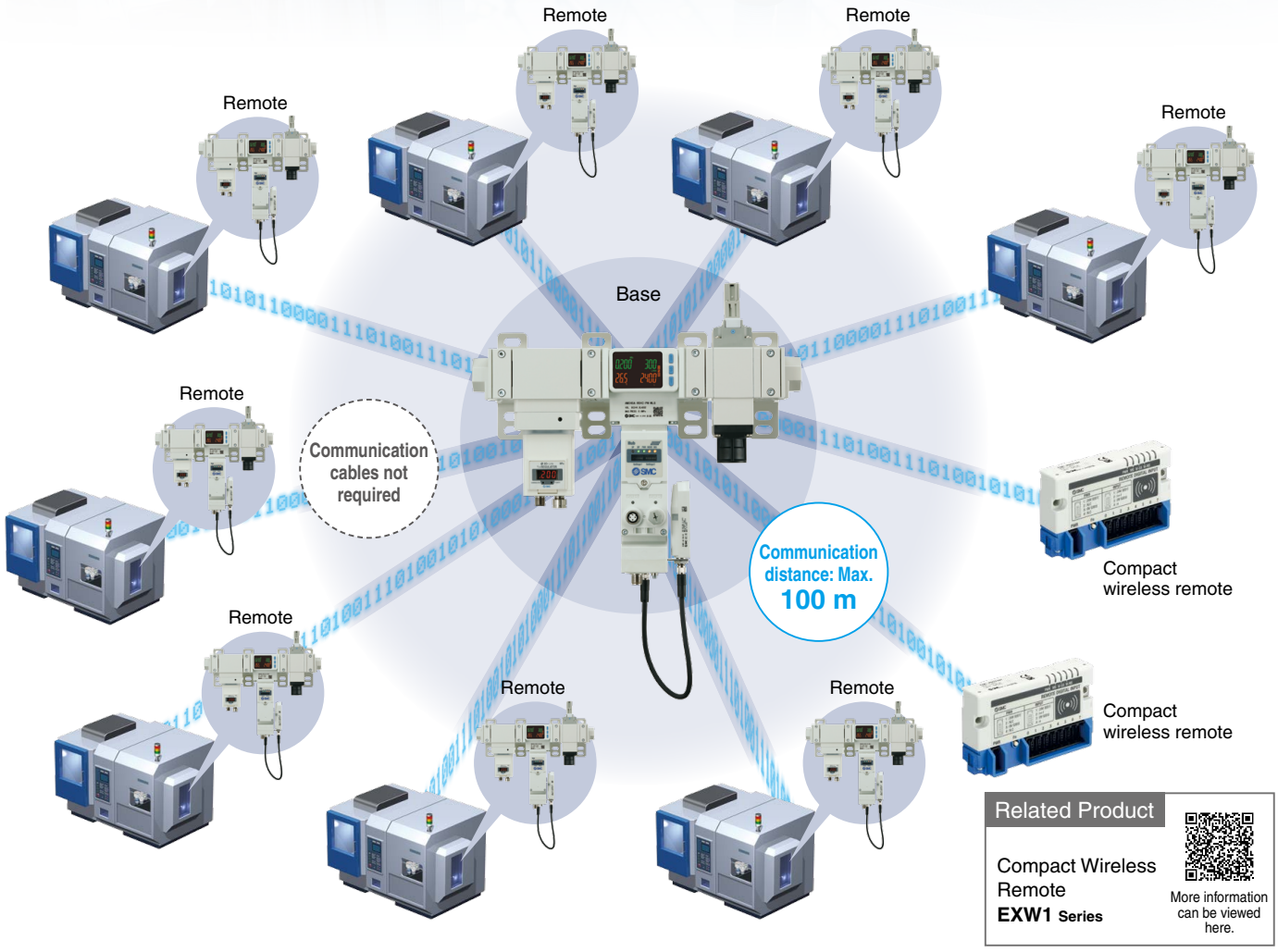

Related Product

Compact Wireless Remote
EXW1 Series

More information can be viewed here.

High security using encryption

Unauthorized access is prevented by using data encryption.

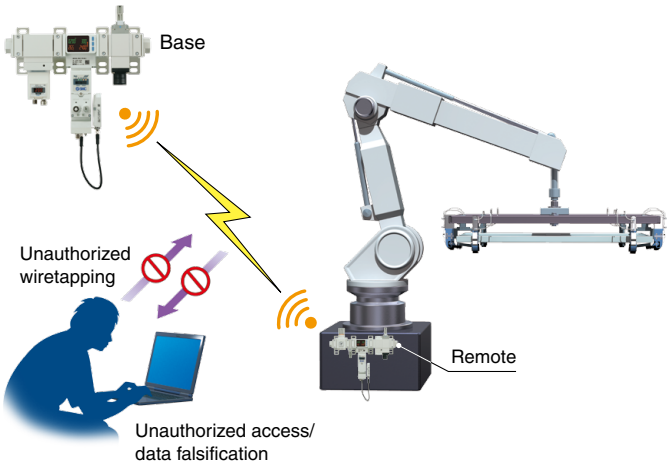

Retrofitted to existing equipment

Can be introduced by OPC UA or the wireless system without connecting to a PLC or changing the program. Modular type F.R.L combination can be connected.

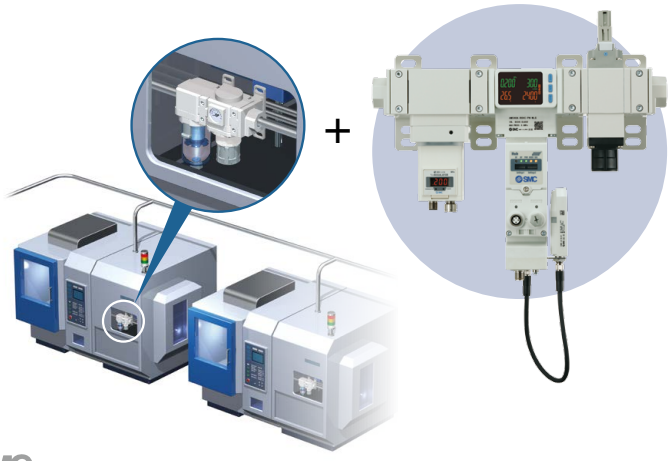

System Configuration

Series	Size	Port size (1/8, 1/4, 3/8, 1/2, 3/4, 1)	Flow capacity [L/min] (5, 10, 20, 40, 500, 1000, 2000, 4000)	Communication protocol	Output data
Electro-Pneumatic Regulator Type **AMS20A/30A/40A/60A Series** 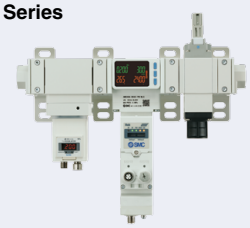	20	● ●		PROFINET EtherNet/IP™ EtherCAT OPC UA	· Instantaneous flow · Accumulated flow · Pressure · Fluid temperature · Various sensor information transmitted via IO-Link · Diagnosis
	30	● ●			
	40	● ●			
	60	● ●			
Regulator Type **AMS20B/30B/40B/60B Series** 	20	● ●			
	30	● ●			
	40	● ●			
	60	● ●			

Components

Air Management Hub

When connected to a wireless adapter, it has the ability to communicate with upper level system and wireless communication. Standby regulator and residual pressure exhaust valve are connected to control the air management system.

Upper Communication Type

Front

Back

The back shape and dimensions are the same for both upper level communication and stand-alone operation types.

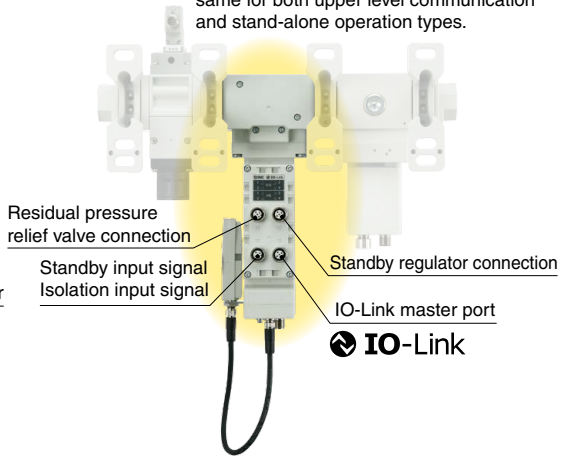

- Industrial Ethernet
  PROFINET
  EtherNet/IP
  EtherCAT
- Data communication protocol
  OPC UA
  ＊ Not compatible with EtherCAT
- IO-Link master function
  IO-Link
- Wireless base function
  (When wireless adapter is connected)

Stand-alone Operation Type

Front

- Wireless remote function
  (When wireless adapter is connected)

Trademark
EtherNet/IP® is a registered trademark of ODVA, Inc.
EtherCAT® is registered trademark and patented technology, licensed by Beckhoff Automation GmbH, Germany.

Components

Standby Regulator

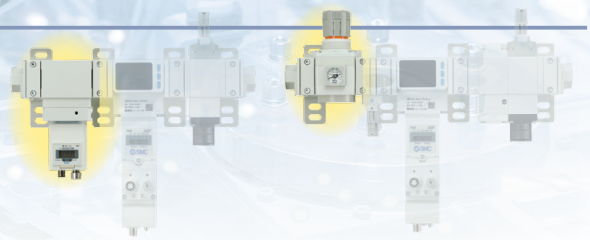

Based on the signal from the air management hub, the operating mode shifts to standby mode and regulates the pressure to the standby pressure.
The non-relief type allows efficient use of air by not exhausting secondary-side air during the standby mode transition.

Electro-Pneumatic Regulator Type
(ITV series/For the AMS20A/30A/40A/60A series)

Pressure display, etc.

- Remote pressure setting and switching during equipment startup/shutdown
- Select from normally closed or normally open.
- With backflow function
- With pressure ramp up duration setting function
- With a solenoid valve overdrive prevention time setting function

Regulator Type
(ARS series/For the AMS20B/30B/40B/60B series)

- Manual pressure setting and switching during equipment shutdown (Equipment operating pressure is not changed.)
- Normally open specification
- With backflow function

Residual Pressure Relief Valve

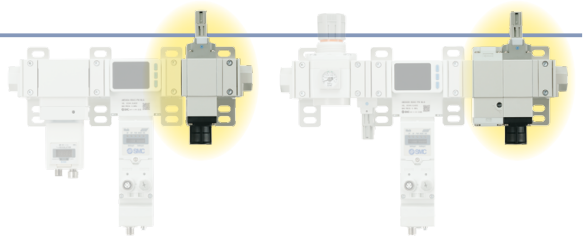

Based on the signal from the air management hub, the operating mode shifts to isolation mode.

Without Soft Start-up Function
(For the AMS20A/30A/40A/60A series)

- Block the air supply to the secondary side.
- Select from normally closed or normally open.

With Soft Start-up Function
(For the AMS20B/30B/40B/60B series)

- Block the air supply to the secondary side.
- Slow air ramp-up when equipment is restarted
- Select from normally closed or normally open.

CONTENTS

Air Management System *AMS20/30/40/60 Series*

Air Management System
Electro-Pneumatic Regulator Type
AMS20A/30A/40A/60A Series

Symbol

N.C.

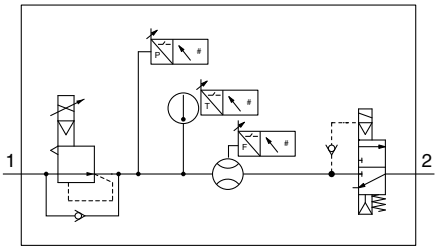

N.O.

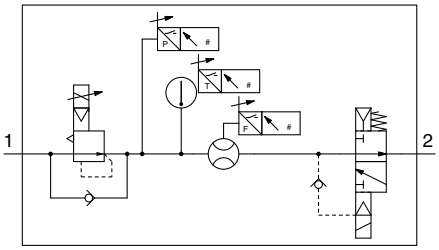

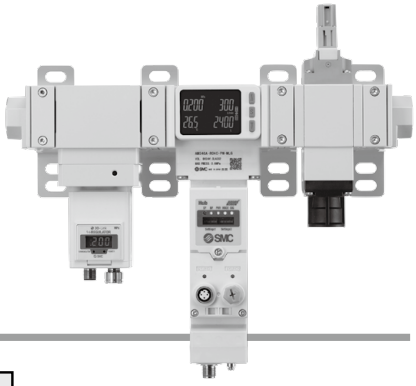

How to Order

AMS 40 A – F 04 C – PN – M L G – ☐

❶ ❷ ❸ ❹ ❺ ❻ ❼ ●

Made to Order **Made to Order** p. 56

X101	Without residual pressure relief 3-port solenoid valve
X102	Without standby regulator

			Symbol	Description	❶ Body size 20	30	40	60
❷	Pipe thread type		R	Rc	●	●	●	●
			N	NPT	●	●	●	●
			F	G	●	●	●	●
			H	Without attachments	●	●	●	●
			+					
❸	Port size		01	1/8	●	—	—	—
			02	1/4	●	●	—	—
			03	3/8	—	●	●	—
			04	1/2	—	—	●	—
			06	3/4	—	—	—	●
			10	1	—	—	—	●
			00	Without attachments	●	●	●	●
			+					
❹	Electro-Pneumatic regulator, Residual pressure relief 3-port solenoid valve	N.O./N.C.	C	N.C. (Normally closed)	●	●	●	●
			D	N.O. (Normally open)	●	●	●	●
			+					
❺	Air management hub	Protocol	SA	Standalone (When wireless adapter is connected*3: Wireless remote)	●	●	●	●
			PN	PROFINET, OPC UA (When wireless adapter is connected*3: Wireless base)	●	●	●	●
			EN	EtherNet/IP™, OPC UA (When wireless adapter is connected*3: Wireless base)	●	●	●	●
			EC	EtherCAT*4 (When wireless adapter is connected*3: Wireless base)	●	●	●	●
			+					
❻	Electro-Pneumatic regulator, Air management hub	Unit	K*1	EXA1/ITV: Units selection function	●	●	●	●
			M*2	EXA1/ITV: SI units only	●	●	●	●
			+					
❼	Residual pressure relief 3-port solenoid valve	Manual override	G	Non-locking push type	●	●	●	●
			E	Push-turn locking type (Manual)	●	●	●	●

*1 Applies to overseas destinations only
*2 Fixed units Instantaneous flow: L/min
Accumulated flow : L
Pressure : kPa, MPa
Temperature : °C
*3 The wireless adapter is sold separately. (Refer to page 48.)
*4 EtherCAT is not compatible with OPC UA. In addition, the PLC (Programmable Logic Controller)/controller must support EoE (Ethernet over EtherCAT).
* The connection cable for the standby electro-pneumatic regulator/residual pressure relief valve is connected.

Standard Specifications: Electro-Pneumatic Regulator Type

Model		AMS20A	AMS30A	AMS40A	AMS60A
Component∗1	**Standby electro-pneumatic regulator**	ITV2050-20	ITV2050-30	ITV3050-40	ITV3050-60
	Air management hub	EXA1-20	EXA1-30	EXA1-40	EXA1-60
	Residual pressure relief 3-port solenoid valve	VP346E	VP546E	VP746E	VP946E
Port size		1/8, 1/4	1/4, 3/8	3/8, 1/2	3/4, 1
Fluid		Air			
Rated flow range		5 to 500 L/min	10 to 1000 L/min	20 to 2000 L/min	40 to 4000 L/min
Ambient and fluid temperatures		0 to 50°C			
Proof pressure		1.0 MPa			
Max. operating pressure		0.8 MPa			
Supply pressure range		0.3 to 0.8 MPa			
Set pressure range		0.2 to 0.7 MPa			
Standby pressure range		0.2 to 0.4 MPa			
Power supply voltage		24 VDC ±10%			
Current consumption		500 mA or less			
Input/Output		DI x 2 DI, DO IO-Link, DI			
Enclosure		IP65 (Electrical equipment part only)			
Weight		2200 g	2500 g	3800 g	5800 g

∗1 Refer to the table below for the single unit specifications of the components.
· Standby electro-pneumatic regulator p. 25
· Air management hub p. 21
· Residual pressure relief 3-port solenoid valve p. 30

Flow Rate Characteristics (Representative values): AMS20A/Electro-Pneumatic Regulator Type

Supply pressure **0.8 MPa**

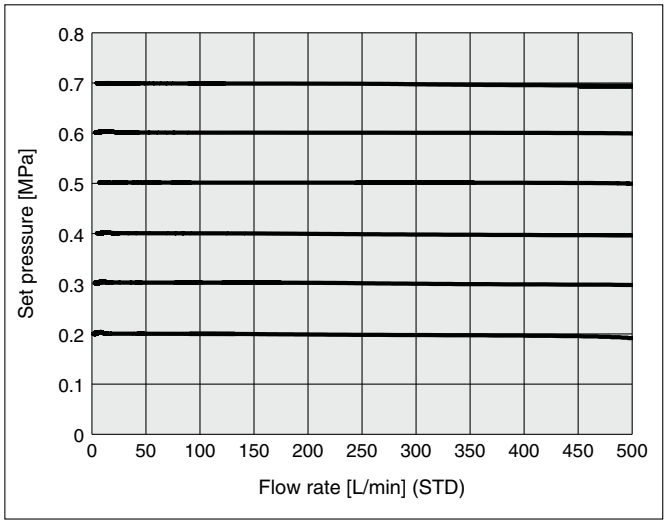

Supply pressure **0.7 MPa**

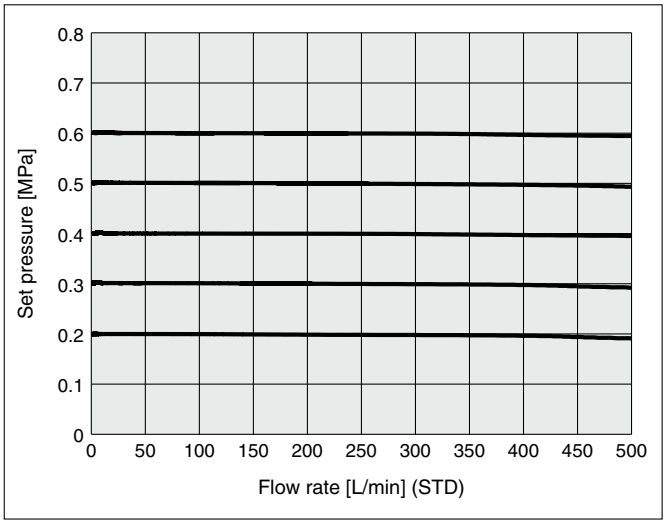

Supply pressure **0.6 MPa**

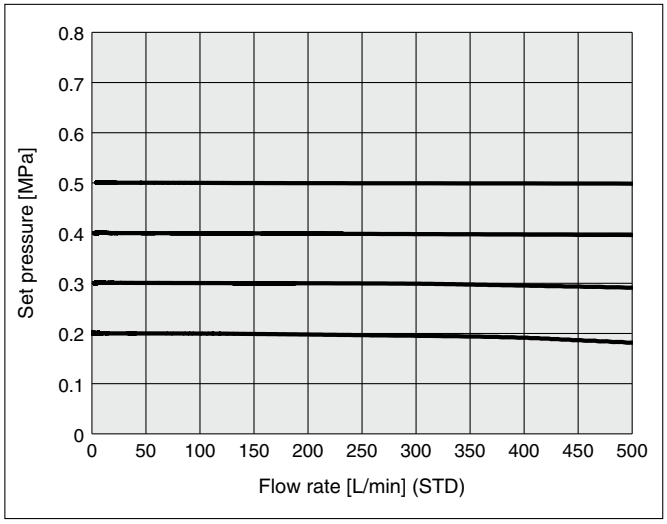

Supply pressure **0.5 MPa**

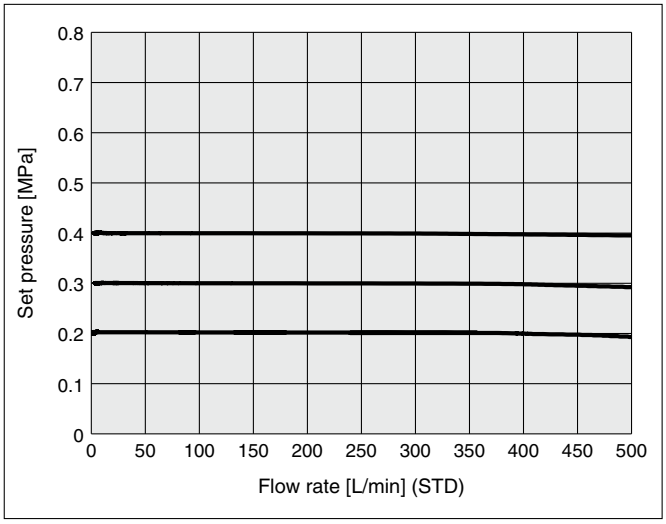

Supply pressure **0.4 MPa**

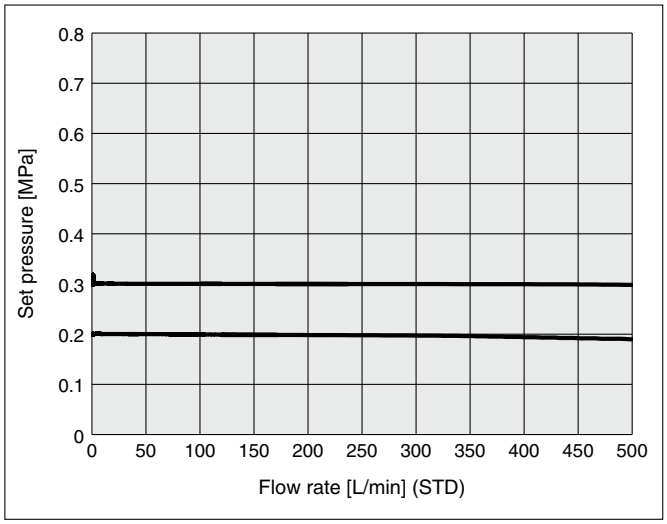

Supply pressure **0.3 MPa**

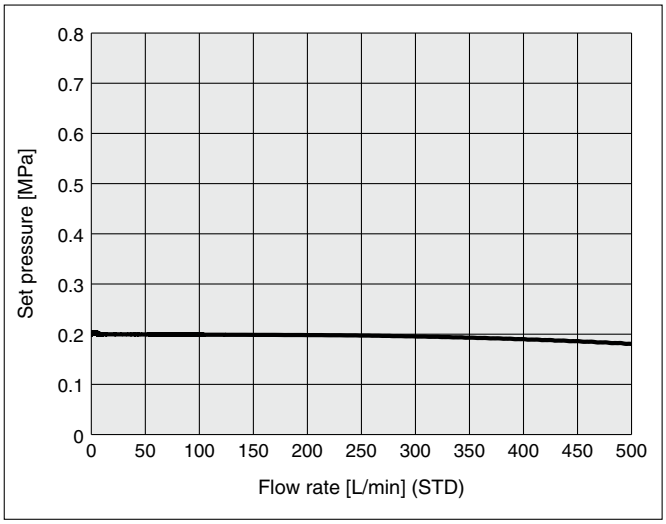

Flow Rate Characteristics (Representative values): AMS30A/Electro-Pneumatic Regulator Type

Supply pressure **0.8 MPa**

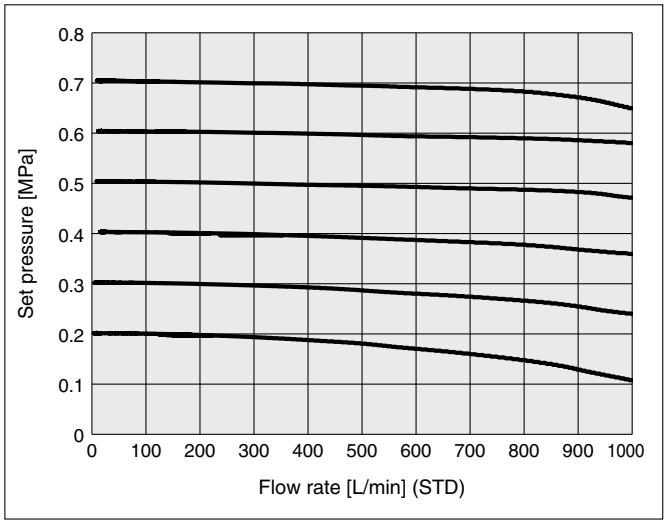

Supply pressure **0.7 MPa**

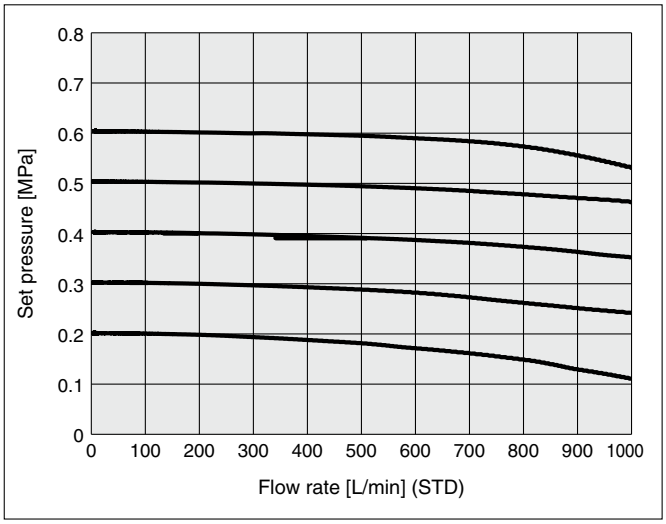

Supply pressure **0.6 MPa**

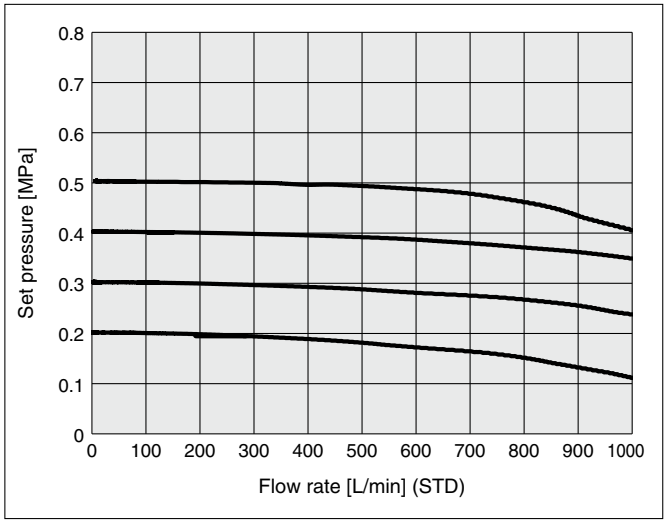

Supply pressure **0.5 MPa**

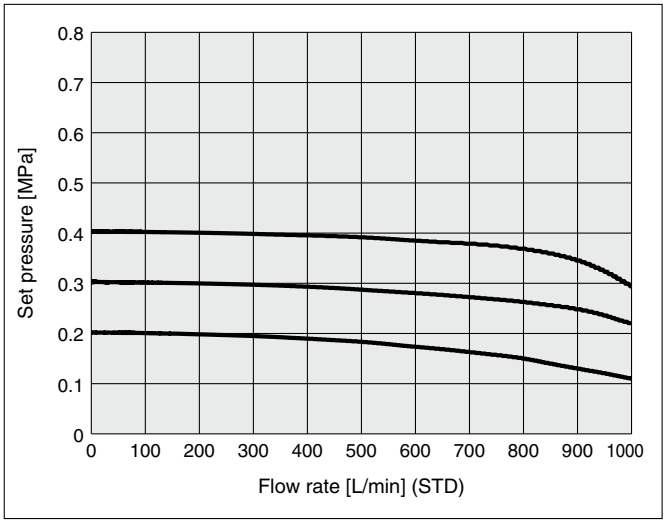

Supply pressure **0.4 MPa**

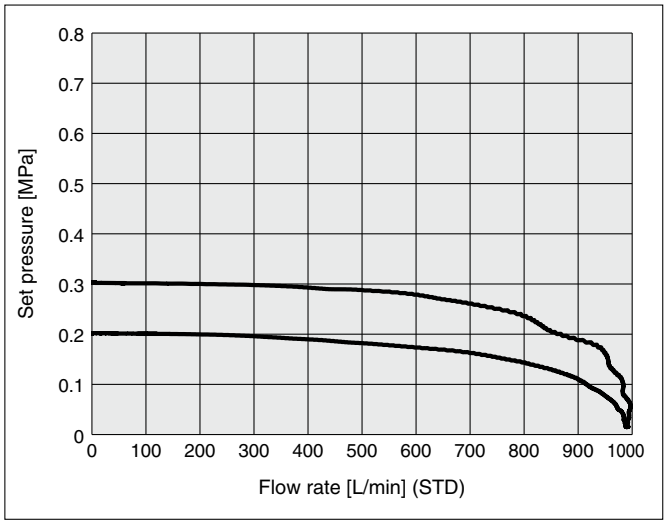

Supply pressure **0.3 MPa**

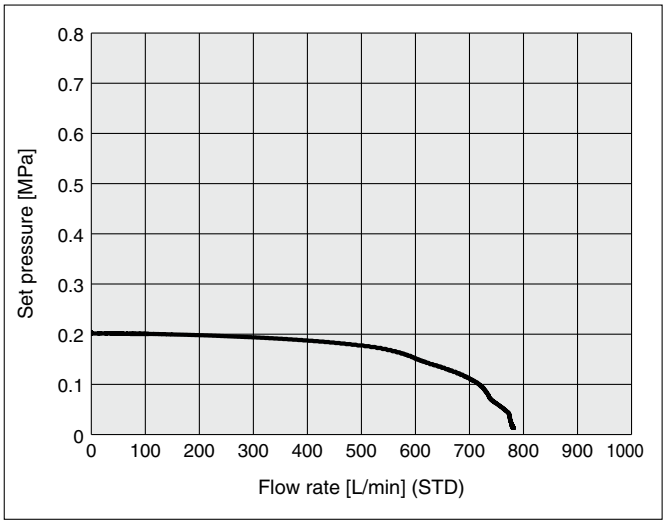

Flow Rate Characteristics (Representative values): AMS40A/Electro-Pneumatic Regulator Type

Supply pressure **0.8 MPa**

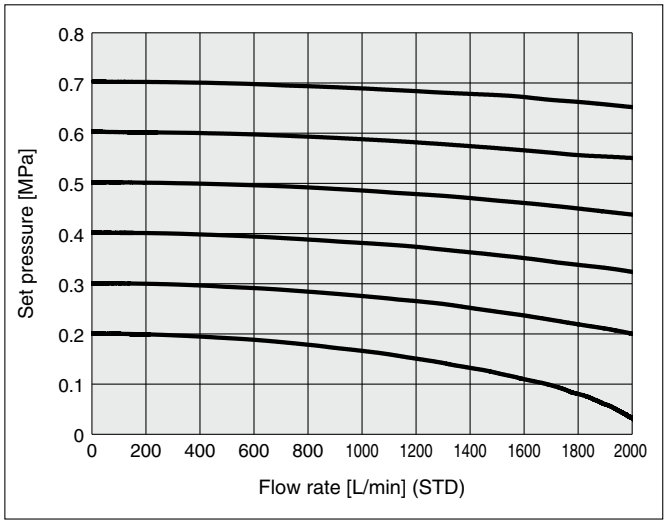

Supply pressure **0.7 MPa**

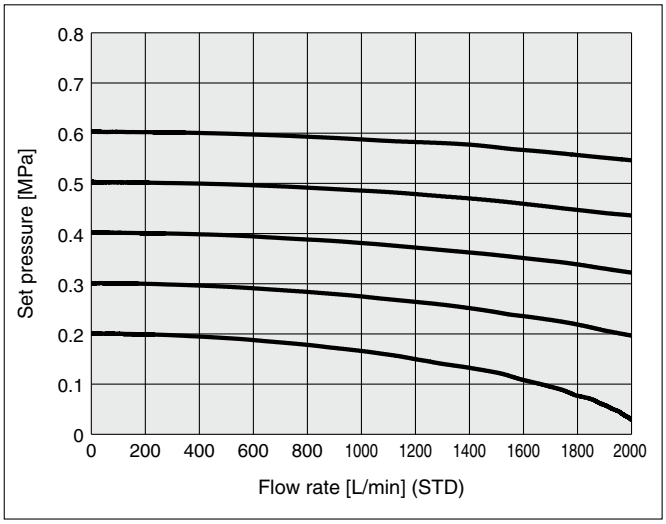

Supply pressure **0.6 MPa**

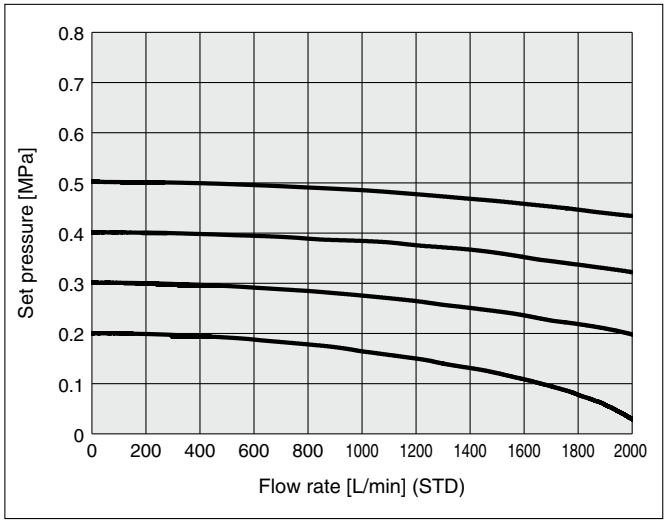

Supply pressure **0.5 MPa**

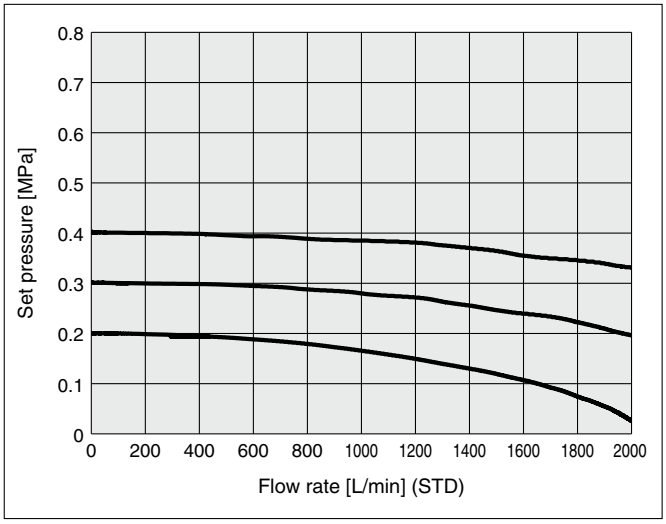

Supply pressure **0.4 MPa**

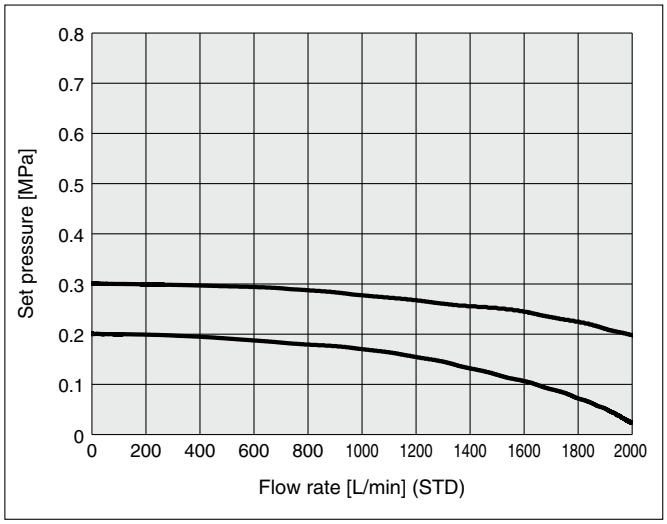

Supply pressure **0.3 MPa**

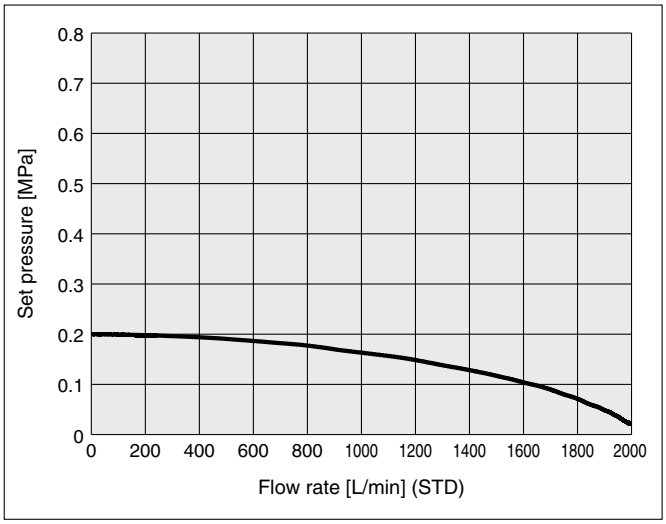

Flow Rate Characteristics (Representative values): AMS60A/Electro-Pneumatic Regulator Type

Supply pressure **0.8 MPa**

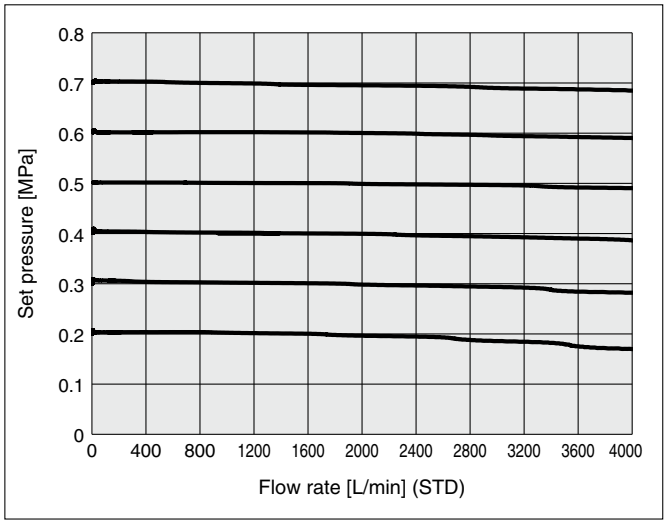

Supply pressure **0.7 MPa**

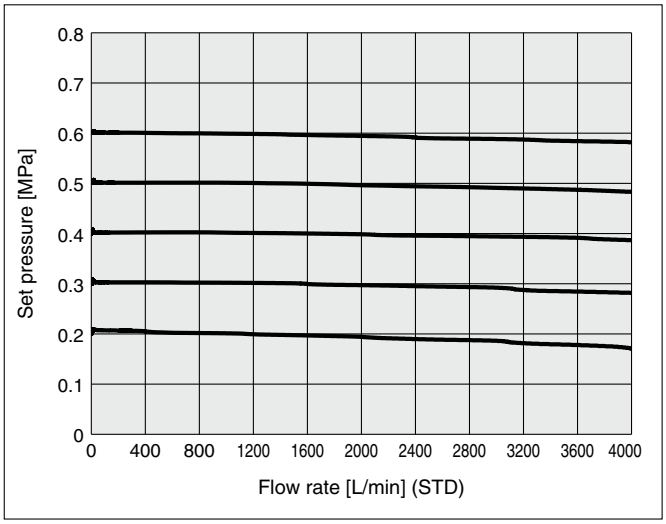

Supply pressure **0.6 MPa**

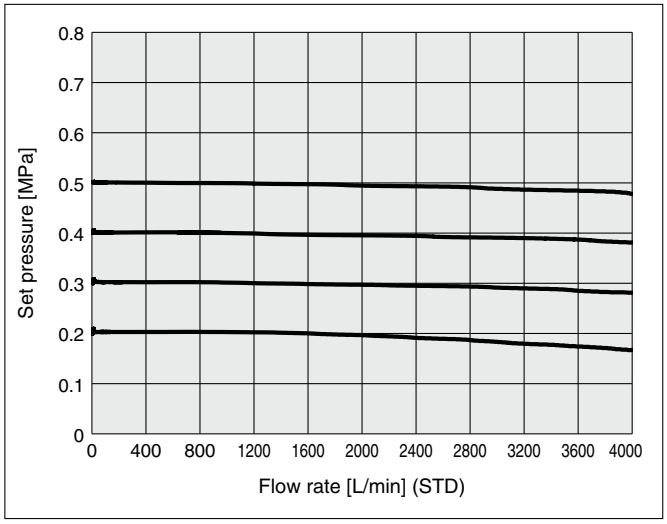

Supply pressure **0.5 MPa**

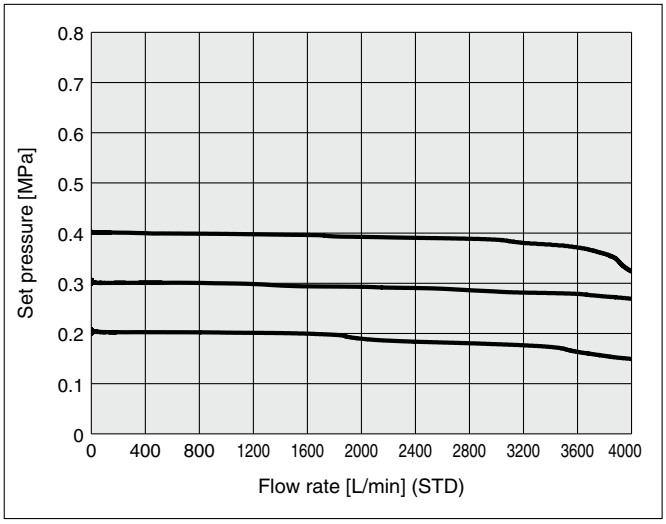

Supply pressure **0.4 MPa**

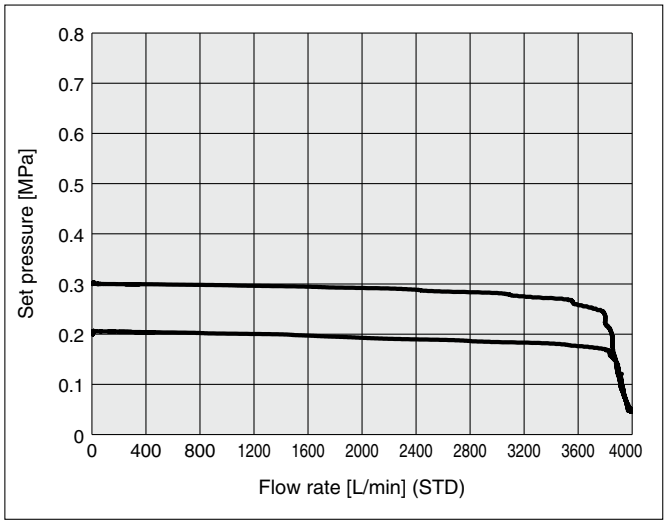

Supply pressure **0.3 MPa**

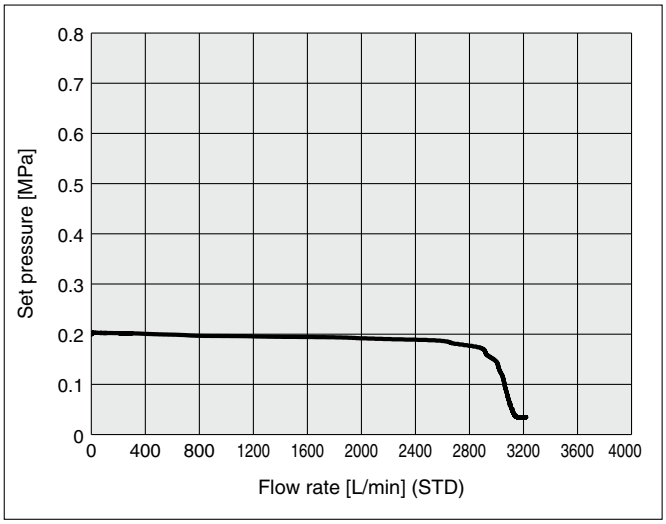

Air Management System
Regulator Type
AMS20B/30B/40B/60B Series

Symbol

N.C.

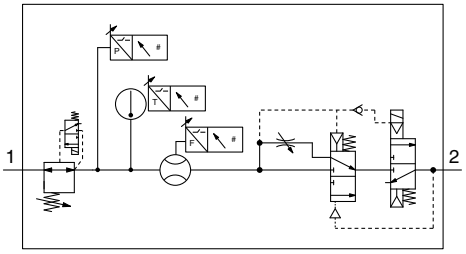

N.O.

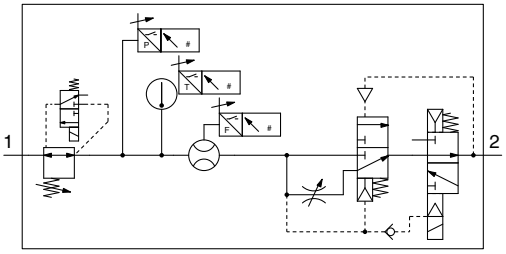

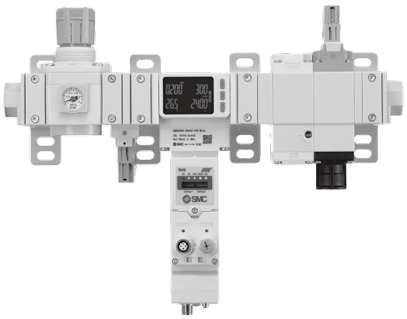

How to Order

AMS 40 B – F 04 C – PN – M L G – □

❶ ❷ ❸ ❹ ❺ ❻ ❼ ●

Made to Order **Made to Order** p. 56

X101	Without residual pressure relief 3-port solenoid valve
X102	Without standby electro-pneumatic regulator

			Symbol	Description	❶ Body size 20	30	40	60
❷	Pipe thread type*1		**R**	Rc	●	●	●	●
			N	NPT	●	●	●	●
			F	G	●	●	●	●
			+					
❸	Port size		**01**	1/8	●	—	—	—
			02	1/4	●	●	—	—
			03	3/8	—	●	●	—
			04	1/2	—	—	●	—
			06	3/4	—	—	—	●
			10	1	—	—	—	●
			00	Without attachments	●	●	●	●
			+					
❹	Regulator, Residual pressure relief 3-port solenoid valve	N.O./N.C.	**C**	N.C. (Normally closed)	●	●	●	●
			D	N.O. (Normally open)	●	●	●	●
			+					
❺	Air management hub	Protocol	**SA**	Standalone (When wireless adapter is connected*4: Wireless remote)	●	●	●	●
			PN	PROFINET, OPC UA (When wireless adapter is connected*4: Wireless base)	●	●	●	●
			EN	EtherNet/IP™, OPC UA (When wireless adapter is connected*4: Wireless base)	●	●	●	●
			EC	EtherCAT*5 (When wireless adapter is connected*4 : Wireless base)	●	●	●	●
			+					
❻	Regulator, Air management hub	Unit	**K***2	Pressure gauge: MPa/psi dual scale, EXA1: Units selection function	●	●	●	●
			M	Pressure gauge in SI units: MPa, EXA1: SI units only*3	●	●	●	●
			+					
❼	Regulator/Residual pressure relief 3-port solenoid valve	Manual override	**G**	Non-locking push type	●	●	●	●
			E	Push-turn locking type (Manual)	●	●	●	●

*1 For port size "00", specify thread type of the standby regulator (ARS).
*2 Applies to overseas destinations only
*3 Fixed units Instantaneous flow: L/min
Accumulated flow : L
Pressure : kPa, MPa
Temperature : °C
*4 The wireless adapter is sold separately. (Refer to page 48.)
*5 EtherCAT is not compatible with OPC UA. In addition, the PLC (Programmable Logic Controller)/controller must support EoE (Ethernet over EtherCAT).
* The connection cable for the standby electro-pneumatic regulator/residual pressure relief valve is connected.

Standard Specifications: Regulator Type

Model		AMS20B	AMS30B	AMS40B	AMS60B
Component∗1	**Standby regulator**	AR20S	AR30S	AR40S	AR50S
	Air management hub	EXA1-20	EXA1-30	EXA1-40	EXA1-60
	Residual pressure relief 3-port solenoid valve	VP346E	VP546E	VP746E	VP946E
Port size		1/8, 1/4	1/4, 3/8	3/8, 1/2	3/4, 1
Fluid		Air			
Rated flow range		5 to 500 L/min	10 to 1000 L/min	20 to 2000 L/min	40 to 4000 L/min
Ambient and fluid temperatures		0 to 50°C			
Proof pressure		1.0 MPa			
Max. operating pressure		0.7 MPa			
Supply pressure range		0.3 to 0.7 MPa			
Standby pressure range		0.2 to 0.4 MPa			
Power supply voltage		24 VDC ±10%			
Current consumption		400 mA or less			
Input/Output		DI x 2 DI, DO IO-Link, DI			
Enclosure		IP65 (Electrical equipment part only)			
Weight		1800 g	2500 g	3800 g	6500 g

∗1 Refer to the table below for the single unit specifications of the components.
· Standby regulator p. 28
· Air management hub p. 21
· Residual pressure relief 3-port solenoid valve p. 30

Flow Rate Characteristics (Representative values): AMS20B/30B/40B/60B/Regulator Type

Conditions/Supply pressure: 0.3 to 0.7 MPa, Standby pressure: 0.2 MPa **Operation mode**

AMS20B

Rc1/4

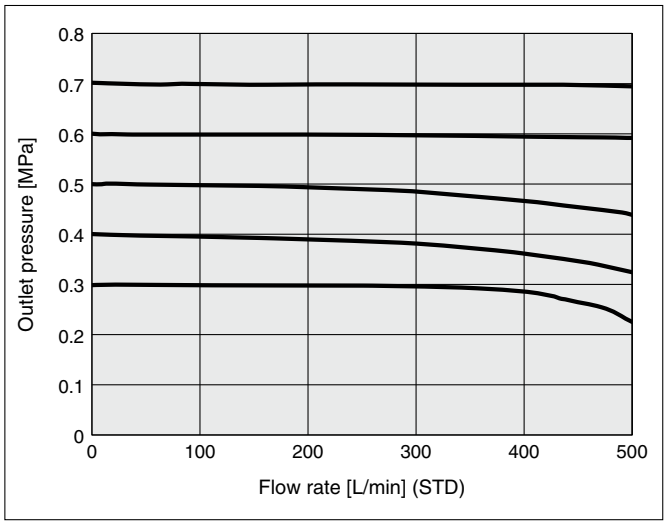

AMS30B

Rc3/8

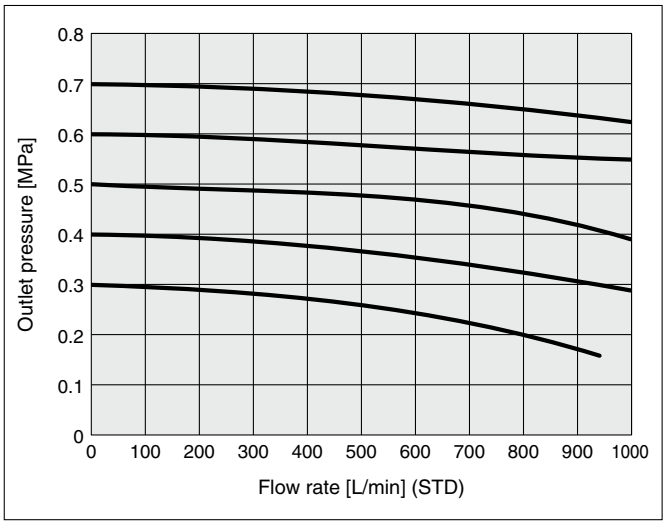

AMS40B

Rc1/2

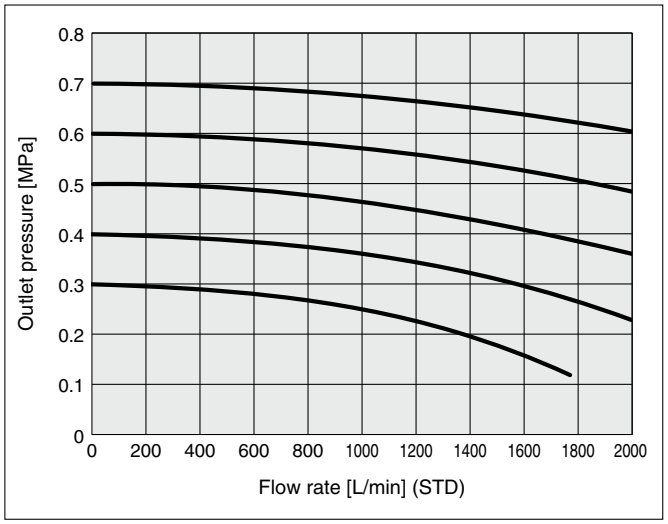

AMS60B

Rc1

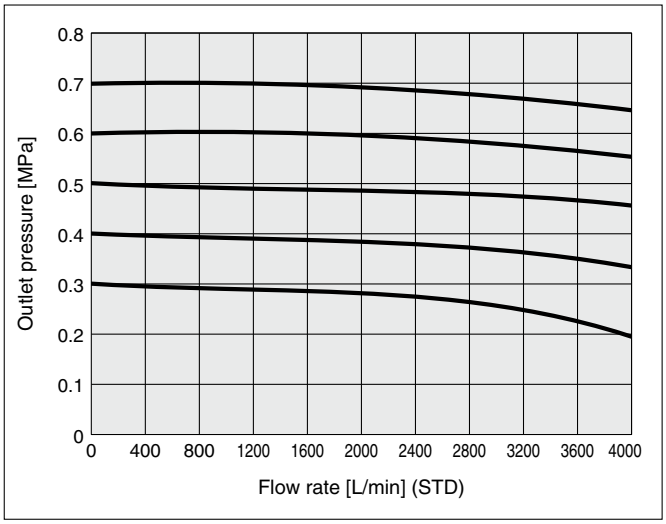

Flow Rate Characteristics (Representative values): AMS20B/30B/40B/60B/Regulator Type

Conditions/Supply pressure: 0.5 MPa, Standby pressure: 0.2 MPa **Standby mode**

AMS20B

Rc1/4

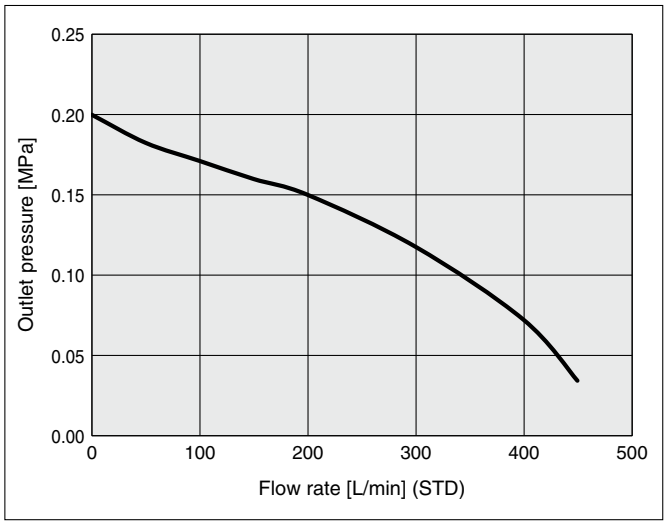

AMS30B

Rc3/8

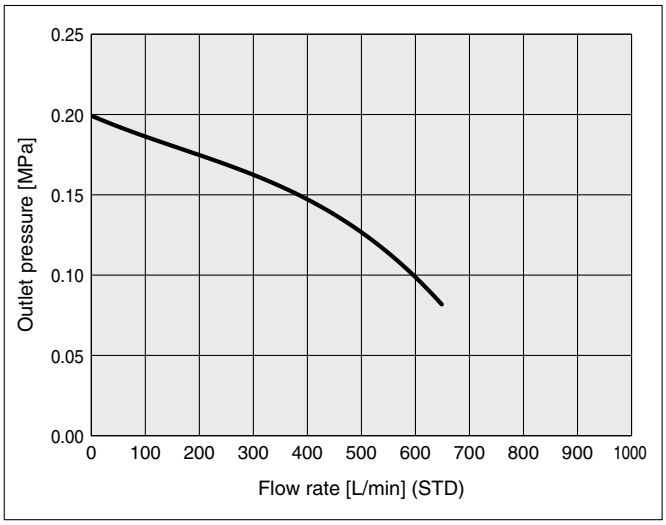

AMS40B

Rc1/2

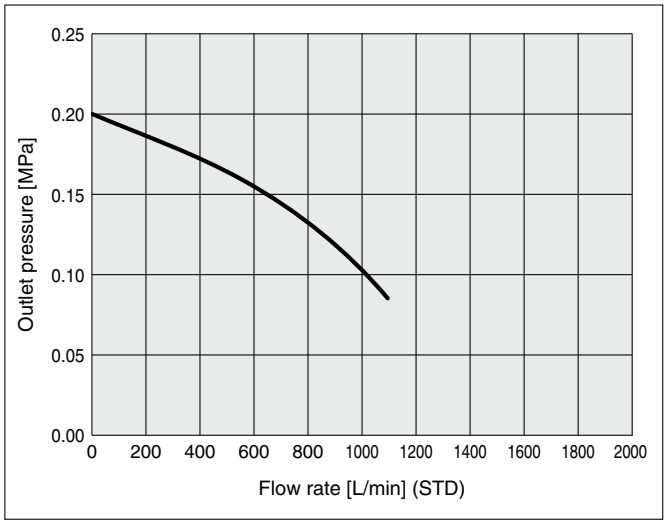

AMS60B

Rc1

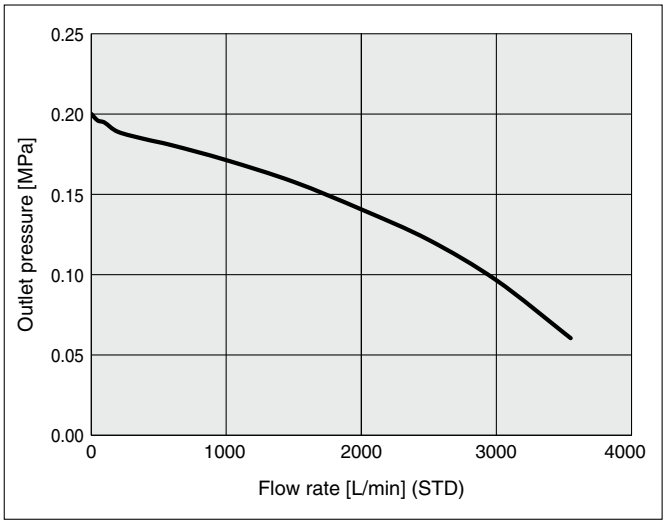

Dimensions: Electro-Pneumatic Regulator Type

N.C. (Normally closed)
AMS20/30/40/60A-R/N/F□C

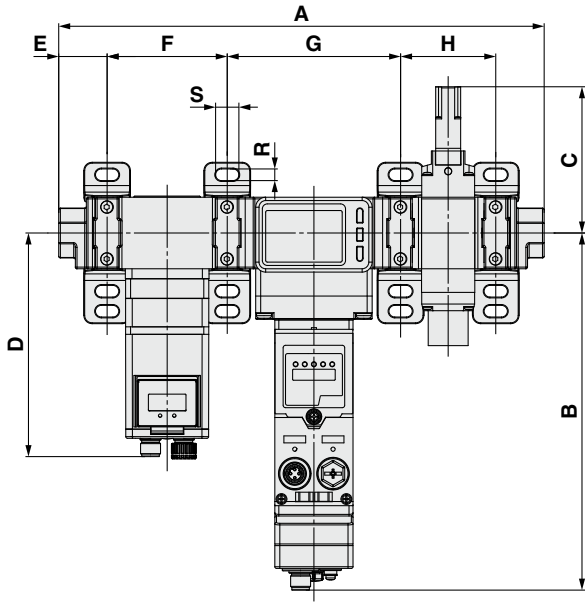

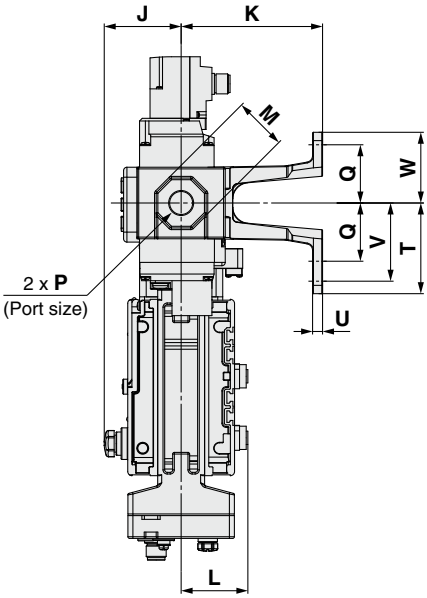

Back side

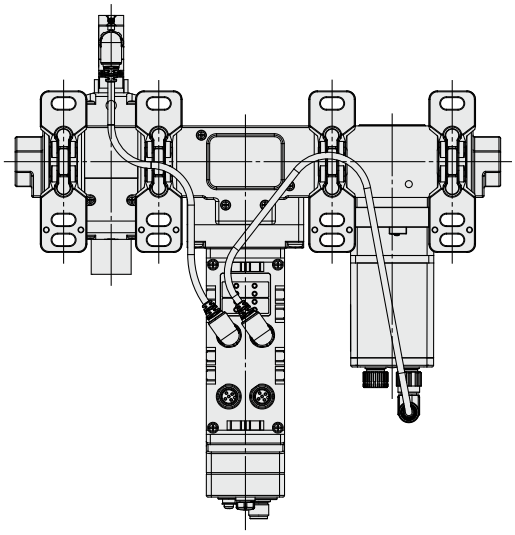

∗ With connection cable for standby regulator/ residual pressure relief valve

SA: Standalone (Wireless remote)

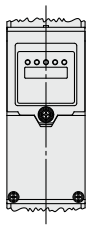

E: Push-turn locking type

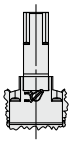

AMS20/30/40/60A-H00C (Without attachments)

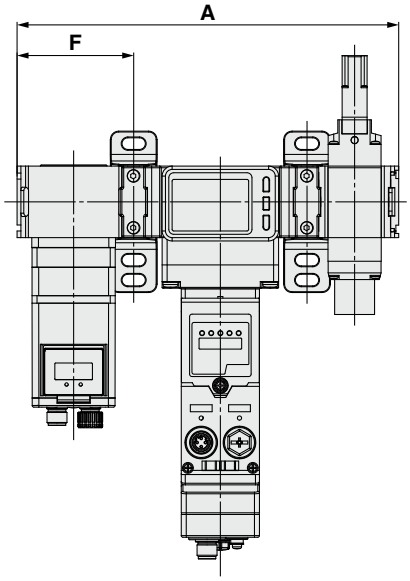

Model	P	A	B	C	D	E	J	M	L	Bracket dimensions										
										K	F	G	H	Q	R	S	T	U	V	W
AMS20A-□C	1/8, 1/4	274.3	214.7	81.7	134.4	25.6	46.2	24	40.1	85	70.2	103.2	49.7	35	7	14	54.5	6	47	42.5
AMS30A-□C	1/4, 3/8	291.8	214.7	87.9	134.4	29.1	46.2	30	40.1	85	72.2	104.2	57.2	35	7	14	54.5	6	47	42.5
AMS40A-□C	3/8, 1/2	334.8	214.9	92.4	151.6	32.6	46.2	36	40.1	85	89.2	105.2	75.2	40	9	18	65	7	55	50
AMS60A-□C	3/4, 1	401.8	214.8	93.7	151.6	42.1	46.2	46	40.1	100	90.2	126.2	101.2	50	11	20	80	8	70	60

Model	P	A	F
AMS20A-H00C	—	219.9	68.6
AMS30A-H00C	—	229.4	70.1
AMS40A-H00C	—	264.4	86.6
AMS60A-H00C	—	311.4	87.1

Dimensions: Electro-Pneumatic Regulator Type

N.O. (Normally open)
AMS20/30/40/60A-R/N/F□D

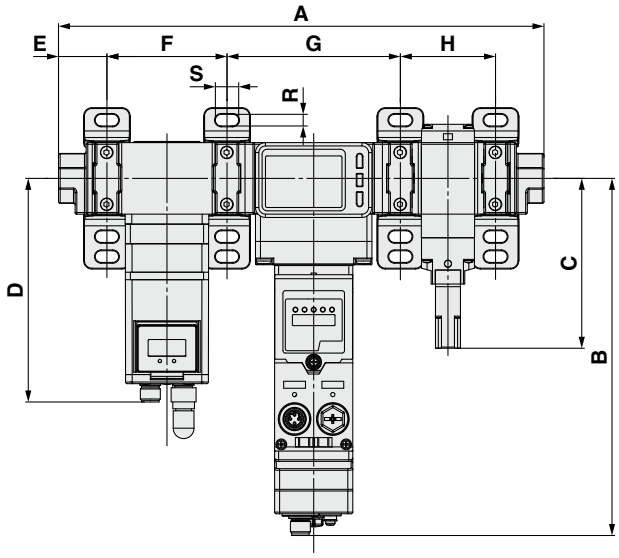

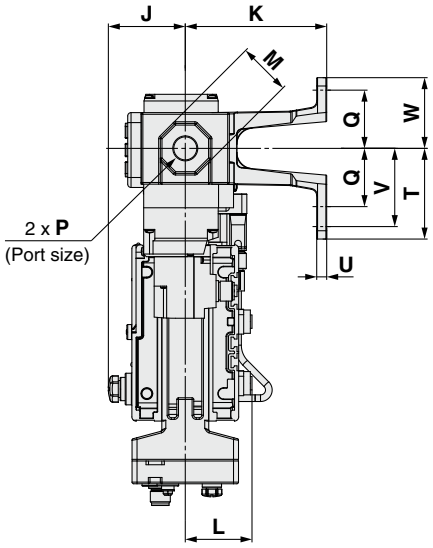

Back side

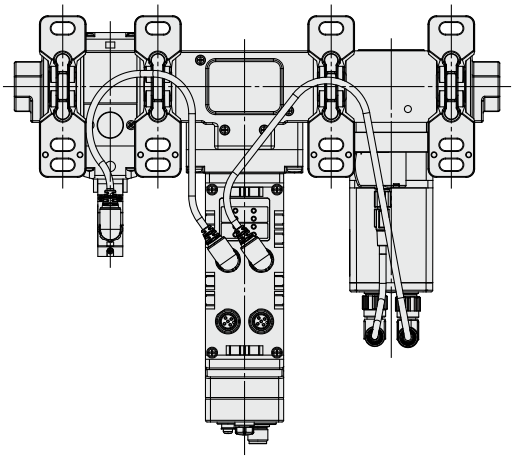

∗ With connection cable for standby regulator/ residual pressure relief valve

SA: Standalone (Wireless remote)

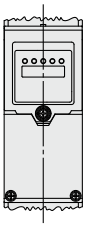

E: Push-turn locking type

AMS20/30/40/60A-H00D (Without attachments)

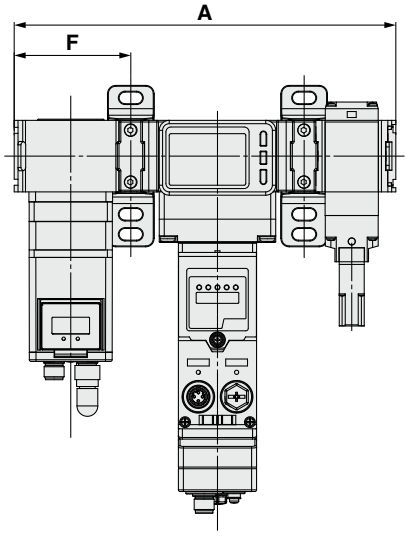

Model	P	A	B	C	D	E	J	M	L	Bracket dimensions										
										K	F	G	H	Q	R	S	T	U	V	W
AMS20A-□D	1/8, 1/4	274.3	214.7	85.1	134.4	25.6	46.2	24	40.1	85	70.2	103.2	49.7	35	7	14	54.5	6	47	42.5
AMS30A-□D	1/4, 3/8	291.8	214.7	102.1	134.4	29.1	46.2	30	40.1	85	72.2	104.2	57.2	35	7	14	54.5	6	47	42.5
AMS40A-□D	3/8, 1/2	334.8	214.9	119.4	151.6	32.6	46.2	36	40.1	85	89.2	105.2	75.2	40	9	18	65	7	55	50
AMS60A-□D	3/4, 1	401.8	214.8	117.7	151.6	42.1	46.2	46	40.1	100	90.2	126.2	101.2	50	11	20	80	8	70	60

Model	P	A	F
AMS20A-H00D	—	219.9	68.6
AMS30A-H00D	—	229.4	70.1
AMS40A-H00D	—	264.4	86.6
AMS60A-H00D	—	311.4	87.1

Dimensions: Regulator Type

N.C. (Normally closed)
AMS20/30/40/60B-R/N/F□C

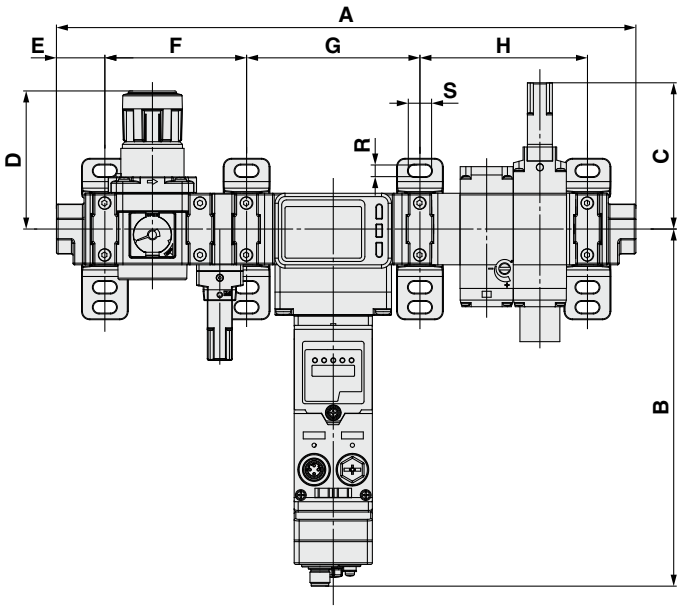

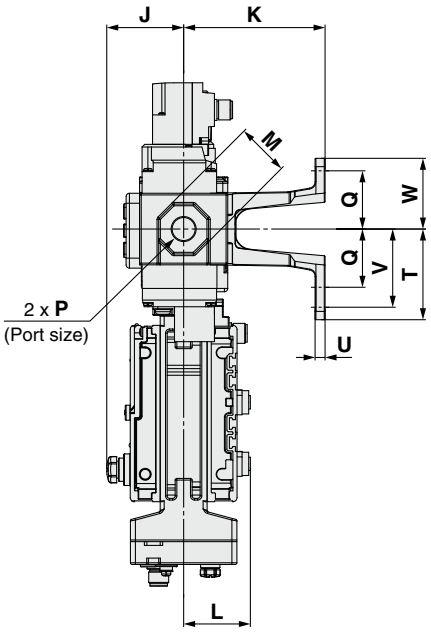

Back side

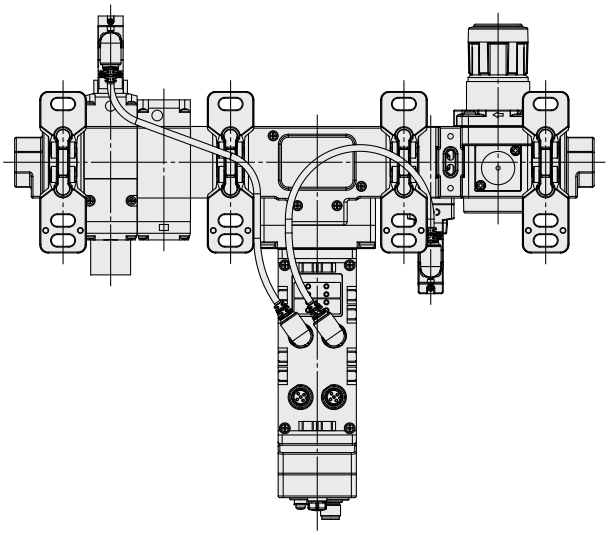

∗ With connection cable for standby regulator/ residual pressure relief valve

SA: Standalone (Wireless remote)

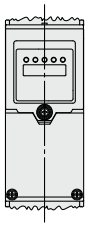

E: Push-turn locking type

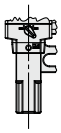

AMS20/30/40/60B-□00C (Without attachments)

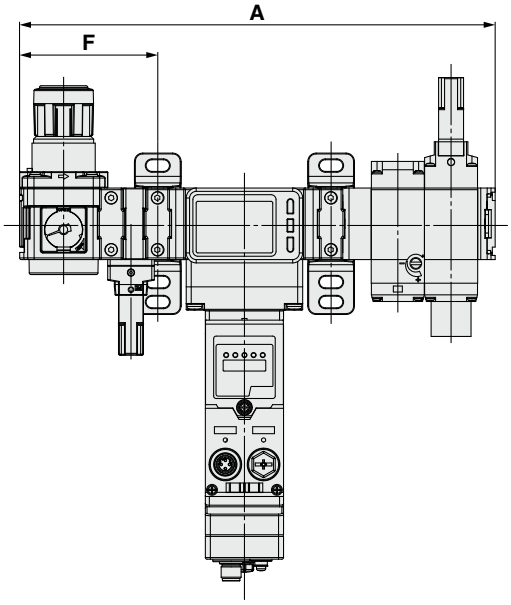

Model	P	A	B	C	D∗1	E	J	M	L	Bracket dimensions										
										K	F	G	H	Q	R	S	T	U	V	W
AMS20B-□C	1/8, 1/4	301.8	214.7	81.7	66.8	25.6	46.2	24	40.1	85	71.2	103.2	76.2	35	7	14	54.5	6	47	42.5
AMS30B-□C	1/4, 3/8	348.3	214.7	87.9	86.5	29.1	46.2	30	40.1	85	85.2	104.2	100.7	35	7	14	54.5	6	47	42.5
AMS40B-□C	3/8, 1/2	395.8	214.9	92.4	91.5	32.6	46.2	36	40.1	85	103.2	105.2	122.2	40	9	18	65	7	55	50
AMS60B-□C	3/4, 1	491.8	214.8	93.4	125	42.1	46.2	46	40.1	100	124.2	126.2	157.2	50	11	20	80	8	70	60

Model	P	A	F
AMS20B-□00C	—	247.4	69.6
AMS30B-□00C	—	285.9	83.1
AMS40B-□00C	—	325.4	100.6
AMS60B-□00C	—	401.4	121.1

∗1 The dimension of D is the length when the regulator knob is unlocked.

Dimensions: Regulator Type

N.O. (Normally open)
AMS20/30/40/60B-□D

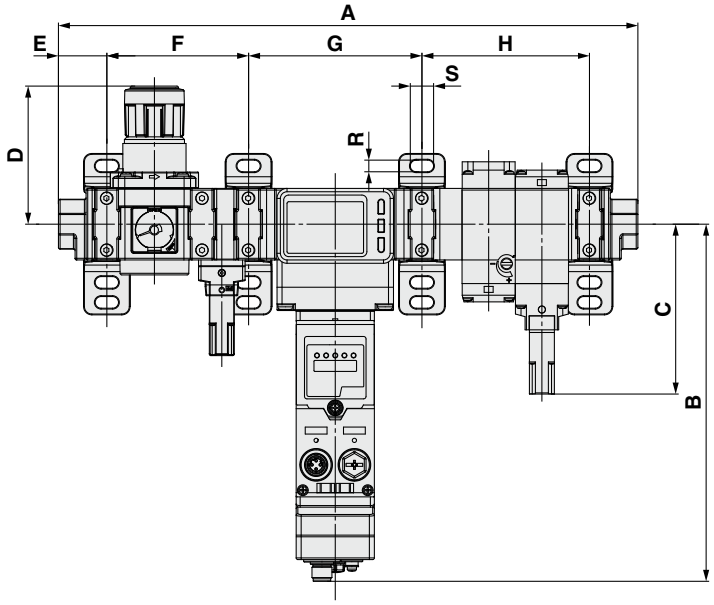

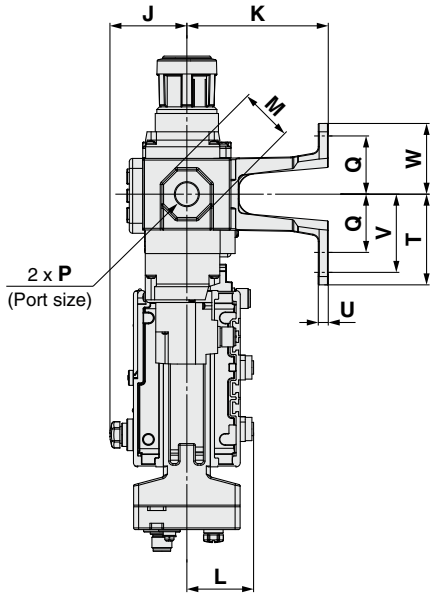

Back side

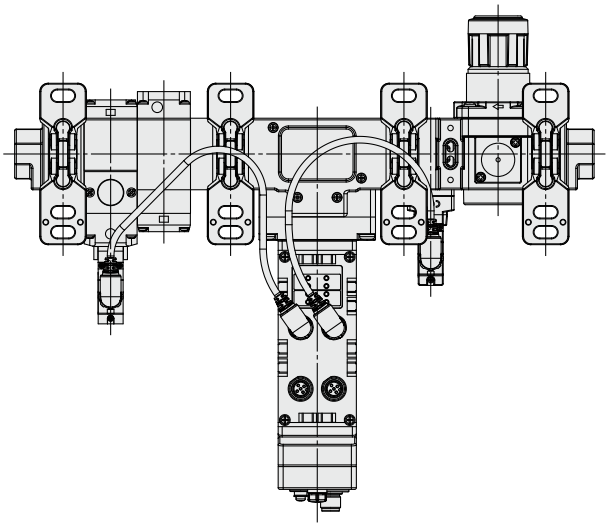

∗ With connection cable for standby regulator/ residual pressure relief valve

SA: Standalone (Wireless remote)

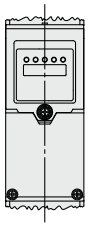

E: Push-turn locking type

AMS20/30/40/60B-□00D (Without attachments)

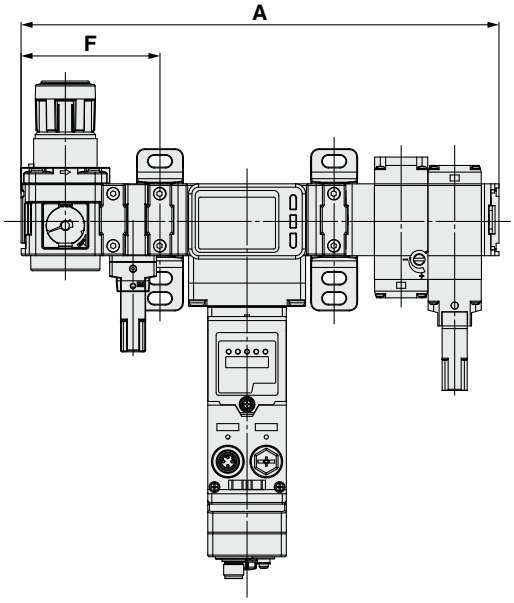

Model	P	A	B	C	D∗1	E	J	M	L	Bracket dimensions										
										K	F	G	H	Q	R	S	T	U	V	W
AMS20B-□D	1/8, 1/4	301.8	214.7	85.1	66.8	25.6	46.2	24	40.1	85	71.2	103.2	76.2	35	7	14	54.5	6	47	42.5
AMS30B-□D	1/4, 3/8	348.3	214.7	102.1	86.5	29.1	46.2	30	40.1	85	85.2	104.2	100.7	35	7	14	54.5	6	47	42.5
AMS40B-□D	3/8, 1/2	395.8	214.9	119.4	91.5	32.6	46.2	36	40.1	85	103.2	105.2	122.2	40	9	18	65	7	55	50
AMS60B-□D	3/4, 1	491.8	214.8	118	125	42.1	46.2	46	40.1	100	124.2	126.2	157.2	50	11	20	80	8	70	60

Model	P	A	F
AMS20B-□00D	—	247.4	69.6
AMS30B-□00D	—	285.9	83.1
AMS40B-□00D	—	325.4	100.6
AMS60B-□00D	—	401.4	121.1

∗1 The dimension of D is the length when the regulator knob is unlocked.

Air Management Hub

EXA1 Series

Symbol

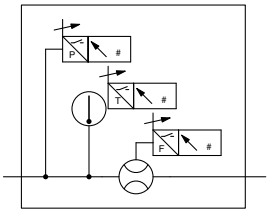

How to Order

EXA1 – 40 – SA – M L

❶ ❷ ❸

		Symbol	Description	❶ Body size 20 For AMS20	30 For AMS30	40 For AMS40	60 For AMS60
❷	Protocol	**SA**	Standalone (When wireless adapter is connected*3: Wireless remote)	●	●	●	●
		PN	PROFINET, OPC UA (When wireless adapter is connected*3: Wireless base)	●	●	●	●
		EN	EtherNet/IP™, OPC UA (When wireless adapter is connected*3: Wireless base)	●	●	●	●
		EC	EtherCAT*4 (When wireless adapter is connected*3 : Wireless base)	●	●	●	●
		+					
❸	Unit	**K***1	Units selection function	●	●	●	●
		M*2	SI units only	●	●	●	●

*1 Applies to overseas destinations only
*2 Fixed units Instantaneous flow: L/min, Accumulated flow: L, Pressure: kPa/MPa, Temperature: °C
*3 The wireless adapter is sold separately. (Refer to page 48.)
*4 EtherCAT is not compatible with OPC UA. In addition, the PLC (Programmable Logic Controller)/controller must support EoE (Ethernet over EtherCAT).

All Protocols Common Specifications

	Model			EXA1-20	EXA1-30	EXA1-40	EXA1-60
Fluid	Measured fluid*1			Air			
	Fluid temperature			0 to 50°C			
Electrical	Power supply voltage			24 VDC ±10%			
	Protection			Polarity protection, Over current protection			
	Current consumption			400 mA			
	Indicator			LED & LCD			
Environment	Operating temperature range			0 to 50°C (No freezing and condensation)			
	Storage temperature range			–10 to 60°C (No freezing and condensation)			
	Standards			CE/UKCA marking, UL (CSA)			
	Enclosure			IP65 (Electrical equipment part only) IEC60529 compliant			
	Ambient humidity			35 to 85% RH			
	Altitude			Up to 3000 m			
	Pollution Degree			3			
	Installation location			Indoor			
Flow	Rated flow range			5 to 500 L/min	10 to 1000 L/min	20 to 2000 L/min	40 to 4000 L/min
	Accumulated flow range			0 to 9,999,999,990 L			
	Smallest settable increment	Instantaneous flow		1 L/min		2 L/min	
		Accumulated flow		10 L			
	Accuracy			±3.0% F.S.			
	Repeatability			±1.0% F.S.			
	Pressure characteristics			±5.0% F.S. (0 to 1.0 MPa, 0.5 MPa standard)			
	Temperature characteristics			±5.0% F.S. (0 to 50°C, 25°C standard)			
	Unit			L/min, CFM (ft³/min)			
Pressure	Rated pressure range			0 to 1.0 MPa			
	Proof pressure			1.5 MPa			
	Accuracy			±3.0% F.S.			
	Repeatability			±1.0% F.S.			
	Temperature characteristics			±5.0% F.S. (0 to 50°C, 25°C standard)			
	Unit			MPa, kPa, kgf/cm², bar, psi			
Temperature	Rated temperature range			0 to 50°C			
	Accuracy*2			±2.5°C (Flow range:10% to 100%)			
	Unit			°C, °F			
Input/Output	User configurable port	Number of free ports		1			
		Configuration		Digital input (x 2), Digital input and output, IO-link and digital input			
		Port specifications	IO-Link	Communication speed	COM1 (4.8 kbps) COM2 (38.4 kbps) COM3 (230.4 kbps) Automatically switches depending on the connected device		
				Max. supply current	0.3 A		
				Max. process data size	Input: 16 bytes/Output: 16 bytes (per port)		
				IO-Link version	Version 1.1		
				IO-Link port class	Class A		
			Input	Input type	PNP input		
				Rated input current	Pin 2: Typ. 2.5 mA, Pin 4: Typ.5.8 mA		
				ON voltage	13 V or more		
				OFF voltage	8 V or less		
			Output	Output type	PNP output		
				Max. load current	0.25 A		
	Input/Output for Air Management System function	Input/output for standby electro-pneumatic regulator			IO-Link		
		Output for standby regulator Output for residual pressure relief valve			PNP output		
		Input for standby Input for isolation		Input type		PNP input	
				Rated input current		Pin 2: Typ. 2.5 mA, Pin 4: Typ. 5.8 mA	
				ON voltage		13 V or more	
				OFF voltage		8 V or less	
				Max. supply current		0.3 A	
Weight				750 g	770 g	810 g	1140 g

*1 Air quality grade is JIS B 8392-1:2012 [4:6:-] and ISO 8573-1:2010 [4:6:-].
*2 When the flow range is less than 10%, temperature accuracy is -2.5 to 7.5°C.

Protocol specifications (EXA1-□-PN)

	Model		EXA1-□-PN
Communication	Number of communication ports		2
	Protocol		PROFINET IO (Conformance Class C)
	Communication speed		100 Mbps
	Configuration file		GSDML file*3
	Occupation area (Number of inputs/outputs)		Max. (406 byte/198 byte)
	Web server		Supported
	OPC UA		Supported
Input/Output	Output	Fail safe	HOLD/CLEAR

*3 The configuration file can be downloaded from the SMC website.
https://www.smcworld.com

Protocol specifications (EXA1-□-EN)

	Model		EXA1-□-EN
Communication	Number of communication ports		2 port
	Protocol		EtherNet/IP™ (Conformance version: Composite 11)
	Communication speed		100 Mbps
	Communication method		Full duplex/Half duplex
	Configuration file		EDS file*4
	Occupation area (Number of inputs/outputs)		Max. (406 byte/198 byte)
	IP address setting range		Through DHCP server: Optional address
	Device information		Vendor ID : 7(SMC Corporation) Device type : 12 (Communication Adapter) Product code : 263
	Web server		Supported
	OPC UA		Supported
Input/Output	Output	Fail safe	HOLD/CLEAR

*4 The configuration file can be downloaded from the SMC website.
https://www.smcworld.com

Protocol specifications (EXA1-□-EC)

	Model		EXA1-□-EC
Communication	Number of communication ports		2
	Protocol		EtherCAT (Conformance Test Record V.2.3.0)
	Communication speed		100 Mbps
	Configuration file		ESI file*5
	Occupation area (Number of inputs/outputs)		Max. (406 byte/198 byte)
	Web server		Supported (When using EoE)*6
	OPC UA		Not supported
Input/Output	Output	Fail safe	HOLD/CLEAR

*5 The configuration file can be downloaded from the SMC website.
https://www.smcworld.com
*6 The PLC (Programmable Logic Controller)/controller must support EoE (Ethernet over EtherCAT).

Dimensions: Sizes 20, 30, 40

EXA1-20/30/40-PN/EN/EC-□

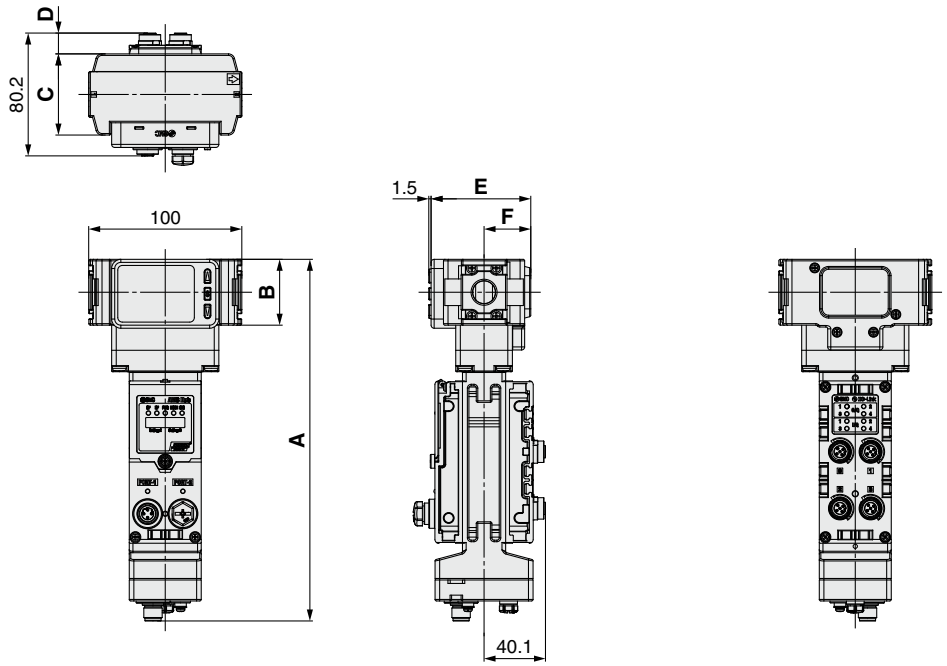

Model	A	B	C	D	E	F
EXA1-20	236.2	35	42	19.1	65.1	30.5
EXA1-30	236.2	43	53	13.6	65.1	30.5
EXA1-40	240.4	51	71	4.6	71	35.5

EXA1-20/30/40-SA-□

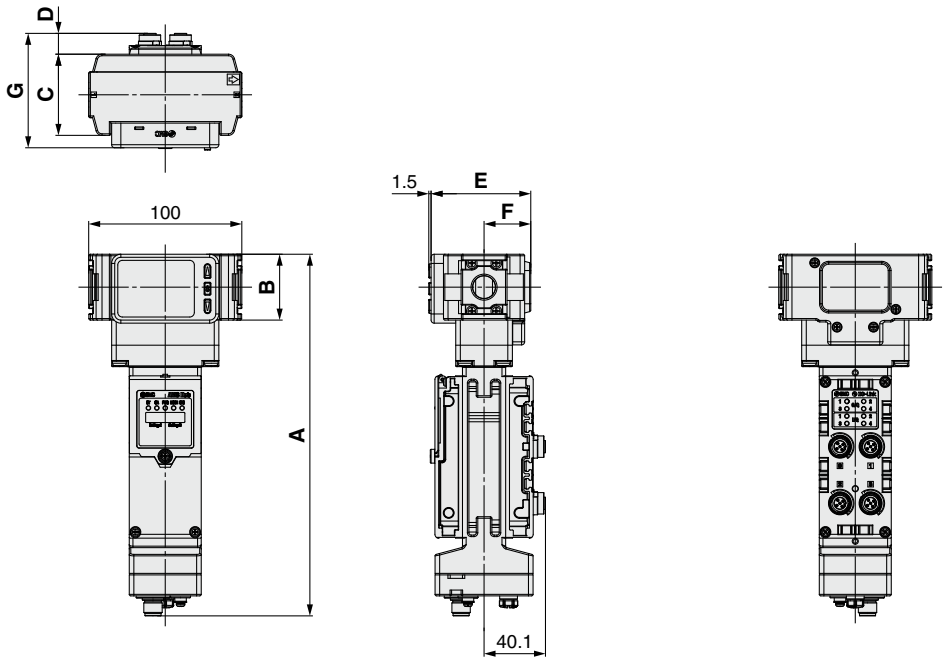

Model	A	B	C	D	E	F	G
EXA1-20	236.2	35	42	19.1	65.1	30.5	74.7
EXA1-30	236.2	43	53	13.6	65.1	30.5	74.7
EXA1-40	240.4	51	71	4.6	71	35.5	75.6

Dimensions: Size 60

EXA1-60-PN/EN/EC-□

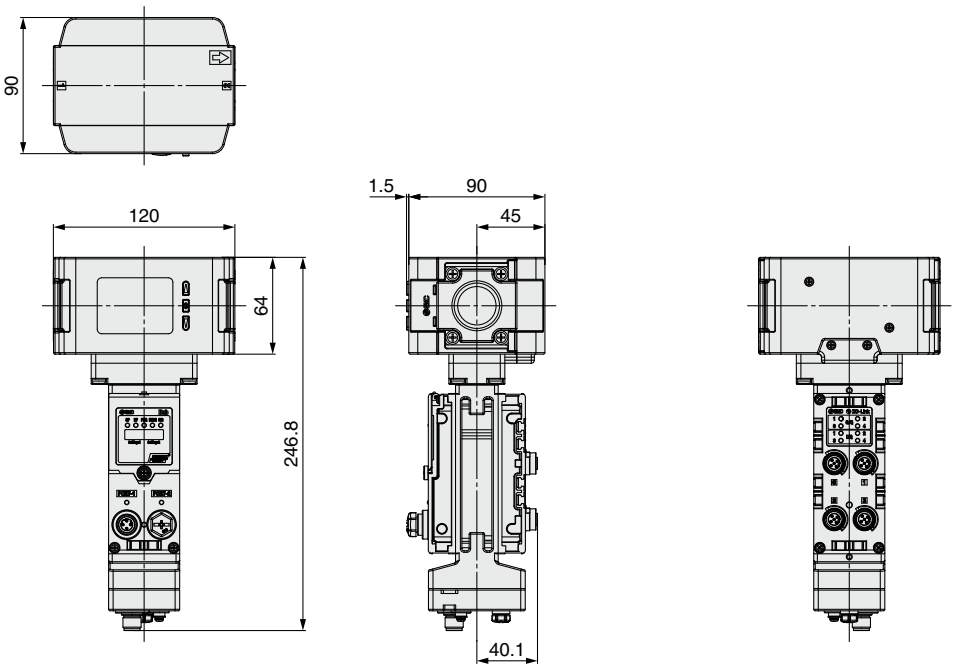

EXA1-60-SA-□

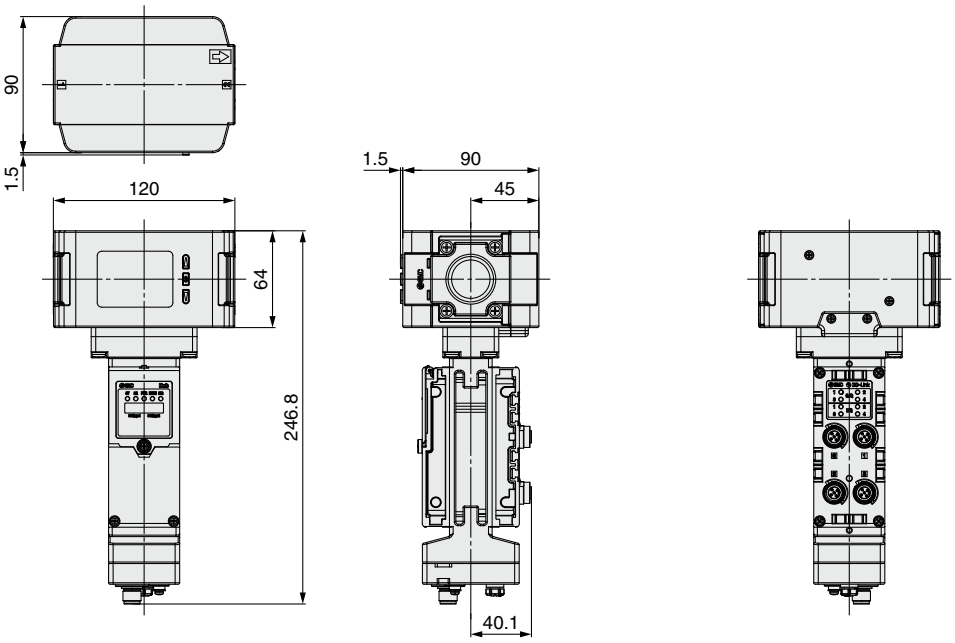

Standby Electro-Pneumatic Regulator

ITV2050 to 3050-X399

Symbol

N.C./N.O.

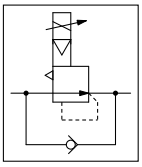

How to Order

For AMS20A	**ITV2050 − IL 20 − 1 − K − X399**
For AMS30A	**ITV2050 − IL 30 − 1 − K − X399**
For AMS40A	**ITV3050 − IL 40 − 1 − K − X399**
For AMS60A	**ITV3050 − IL 60 − 1 − K − X399**

❶ ❷ ❸

❶ Applicable AMS□A size

20	For AMS20A
30	For AMS30A
40	For AMS40A
60	For AMS60A

❷ Type of actuation

1	Normally closed
2	Normally open*2

❸ Pressure display unit

K	Units selection function
M	SI units only*6

Specifications

Applicable AMS series		AMS20A	AMS30A	AMS40A	AMS60A
Min. supply pressure		Set pressure +0.1 MPa			
Max. supply pressure		0.8 MPa			
Set pressure range (Rated)*1		0.005 to 0.7 MPa			
Power supply	**Voltage**	24 VDC ±10%			
	Current consumption	0.12 A or less			
Communication	**Protocol**	IO-Link			
	Version	VERSION 1.1			
	Communication speed	230.4 kbps (COM3)			
	IO-Link port	CLASS A			
	IO-Link type	Device			
Linearity		±1% F.S. or less*4			
Repeatability		±0.5% F.S. or less			
Sensitivity		0.2% F.S. or less			
Temperature characteristics		±0.12% F.S./°C or less			
Output pressure display	**Accuracy**	±2% F.S. ±1 digit or less			
	Min. unit*5	3 digits MPa: 0.001, 2 digits MPa: 0.01, kgf/cm^2: 0.01, bar: 0.01, psi: 1, kPa: 1			
Ambient and fluid temperatures		0 to 50°C (No condensation)			
Enclosure		IP65			
Weight (Without accessories)		727 g	780 g	1320 g	1640 g

*1 This product does not exhaust by itself. It is not possible to decrease the output pressure with this product alone. (Except when supply pressure is shut off)
*2 In the case of the normally open specification, the output pressure is the supply pressure minus 0.1 MPa or more when the product is turned off.
*3 This product will reduce output pressure to 0.005 MPa or less if the secondary side output is present when supply pressure is shut off.
*4 Since this product does not exhaust by itself, it does not meet product specifications if there is no pressure drop or overshoot.
*5 If the unit is fixed to SI, only MPa or kPa will be displayed.
*6 For use in Japan, the product fixed to SI unit must be used to comply with the new Measurement Act.
*7 This product is for AMS20A/30A/40A/60A only. Do not use for any other application.

Dimensions: Sizes 20, 30

N.C. (Normally closed)
ITV2050-□20/30-□-X399

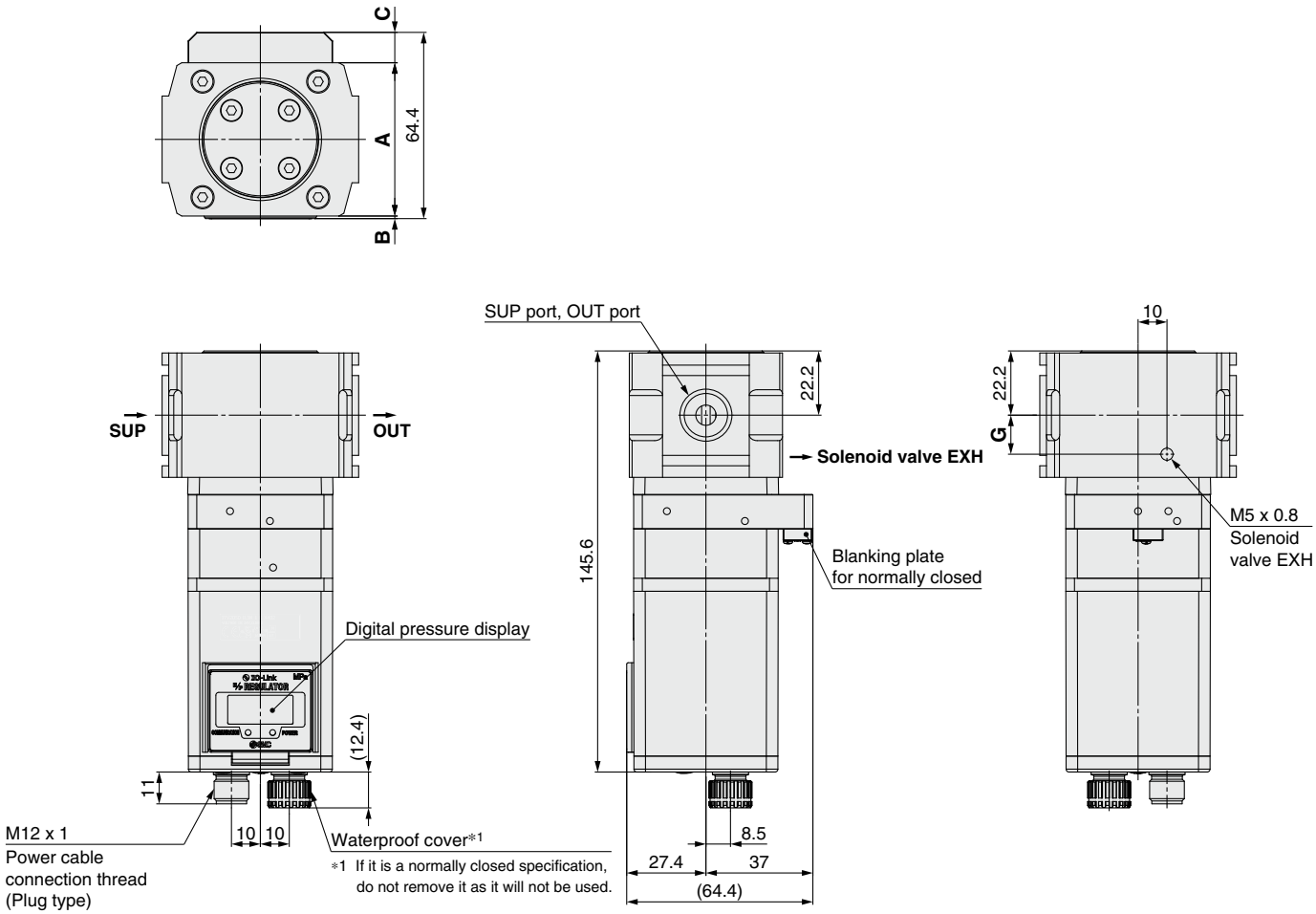

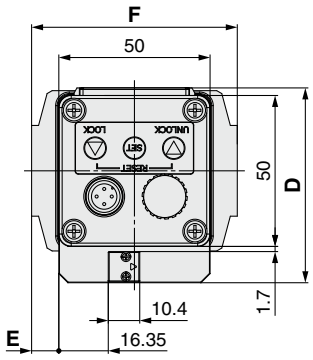

N.O. (Normally open)

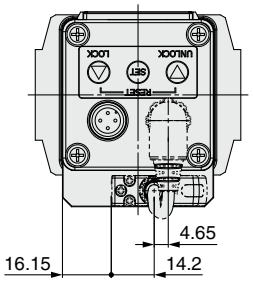

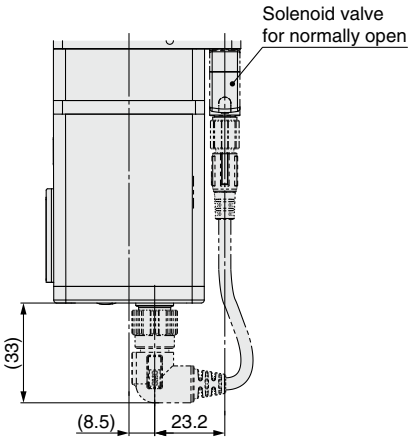

Model	A	B	C	D	E	F	G
ITV2050-20-□-X399	50	2.4	11.8	64.5	8.5	67	12.5
ITV2050-30-□-X399	53	0.9	10.5	64.4	9	68	13.5

Dimensions: Sizes 40, 60

N.C. (Normally closed)
ITV3050-□40/60-□-X399

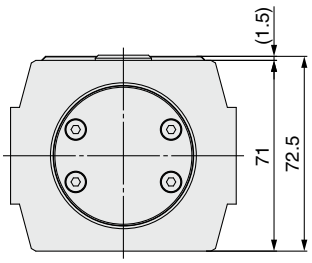

ITV3050-60

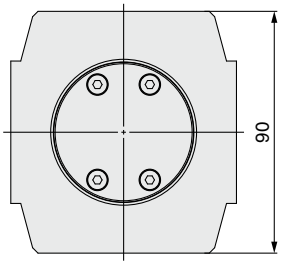

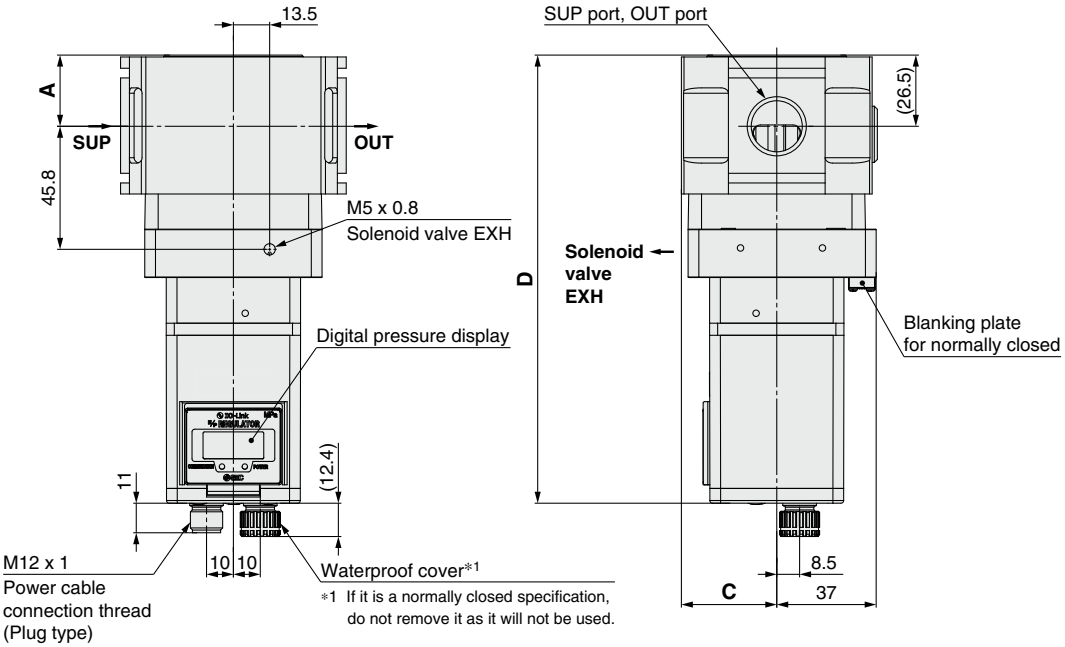

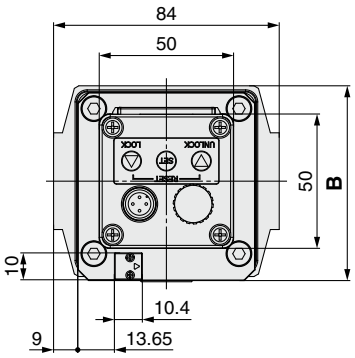

N.O. (Normally open)

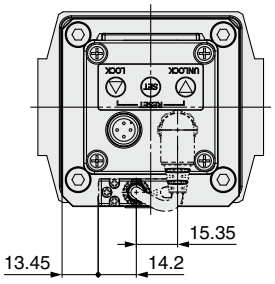

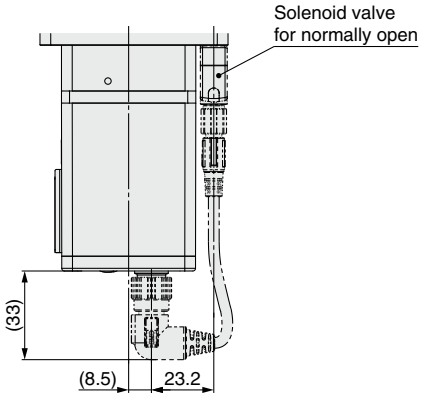

Model	A	B	C	D
ITV3050-40-□-X399	26.5	72.5	35.5	166.8
ITV3050-60-□-X399	33	90	45	173.6

Pilot valve only

RoHS

Standby Regulator
AR20S to 50S Series

Symbol

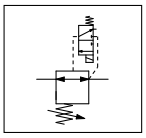

How to Order

AR 30 S – ☐ 03 E – Y ☐ – 15V ☐

❶ ❷ ❸ ❹ ❺

			Symbol	Description	❶ Body size 20 For AMS20B	30 For AMS30B	40 For AMS40B	50 For AMS60B
❷	Pipe thread type		Nil	Rc	●	●	●	●
			N	NPT	●	●	●	●
			F	G	●	●	●	●
			+					
❸	Port size (Screws are IN side only.)		02	1/4	●	—	—	—
			03	3/8	—	●	—	—
			04	1/2	—	—	●	—
			10	1	—	—	—	●
			+					
❹	Pressure gauge	Unit	Nil	Name plate and pressure gauge in SI units: MPa	●	●	●	●
			Z	Name plate: MPa, Pressure gauge: MPa/psi dual scale	●	●	●	●
			+					
❺	Pilot valve	Manual override	Nil	Non-locking push type	●	●	●	●
			E	Push-turn locking type (Manual)	●	●	●	●

Specifications

Model	AR20S	AR30S	AR40S	AR50S
Port size	1/4	3/8	1/2	1
Fluid	Air			
Ambient and fluid temperatures	0 to 50°C			
Proof pressure	1.05 MPa			
Max. operating pressure	0.7 MPa			
Set pressure range	0.2 to 0.4 MPa			
Regulator exhaust construction	Non-relieving type			
Pilot valve exhaust method	Individual exhaust			
Lubrication	Not required			
Impact/Vibration resistance∗1	150/30 m/s²			
Enclosure	IP65 (Electrical equipment part only)			
Weight	0.30 kg	0.49 kg	0.77 kg	1.49 kg

∗1 Impact resistance: No malfunction occurred when it is tested in the axial direction and at the right angles to the main valve and armature in both energized and de-energized states every once for each condition. (Values at the initial period)
Vibration resistance: No malfunction occurred in a one-sweep test between 45 and 2000 Hz. The test was performed at both energized and de-energized states in the axial direction and at the right angles to the main valve and armature. (Values at the initial period)

Pilot Valve Solenoid Specifications

Coil rated voltage	24 VDC
Allowable voltage fluctuation	±10% of the rated voltage
Power consumption	0.4 W
Surge voltage suppressor	Diode
Indicator light	LED
Electrical entry	M12 connector
Standards	CE/UKCA marking, UL (CSA)

Dimensions

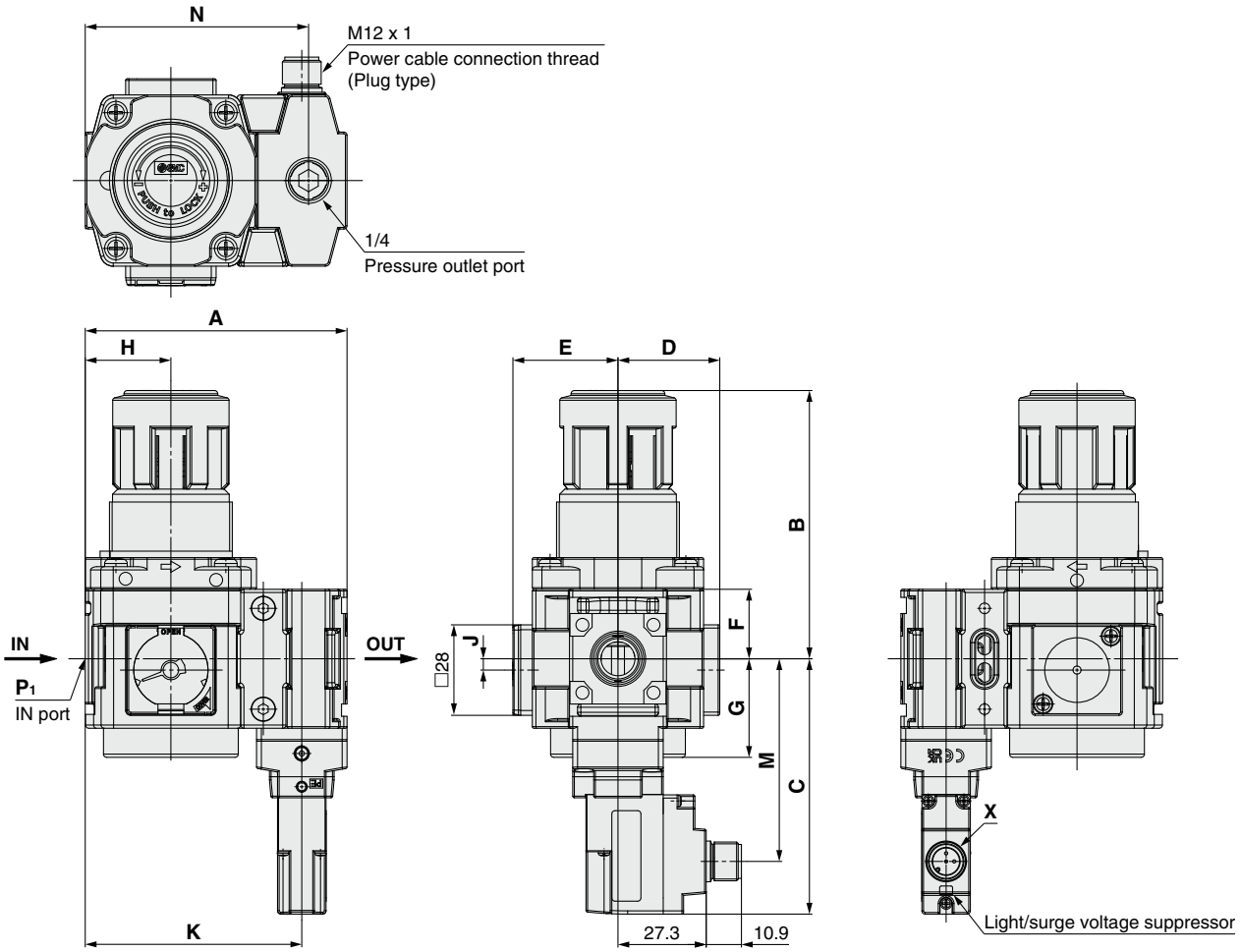

E: Push-turn locking type

Detailed figure of X section
(M12 connector pin assignment)

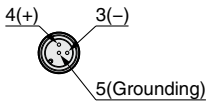

Model	P1	A	B*1	C	D	E	F	G	H	J	K	M	N
AR20S	1/4	68	66.8	73	26	27	17.5	26.5	20	2	54	56.7	55.6
AR30S	3/8	81	86.5	79	31.5	32.5	21.5	30.5	26.5	3.5	67	62.7	69.1
AR40S	1/2	98	91.5	83	40.5	41.5	25.5	35.5	35	—	84	66.7	86.6
AR50S	1	118	125	90.5	50	51	32	43	45	—	104	74.2	105

*1 The dimension of B is the length when the regulator knob is unlocked.

Residual Pressure Relief 3-Port Solenoid Valve

VP346E/546E/746E/946E-X660/X661

Symbol

N.C.

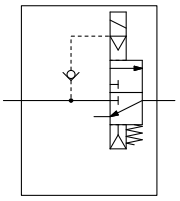

N.O.

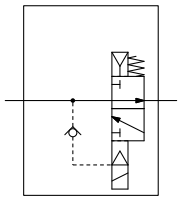

With soft start-up function

N.C.

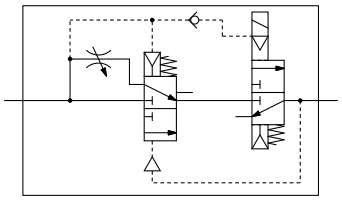

N.O.

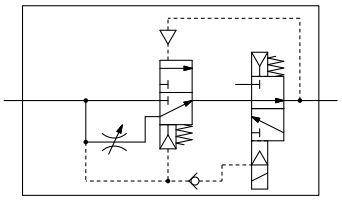

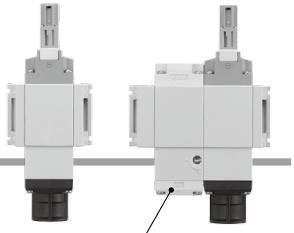

With soft start-up function

How to Order

VP 3 46 E – 5 KVO Z □ 1 – □ – X660

❶ ❷ ❸ ❹ ❺

❶ Series

3	For AMS20	VP300
5	For AMS30	VP500
7	For AMS40	VP700
9	For AMS60	VP900

❷ M12 connector

		Pin assignment	Series VP300	VP500	VP700	VP900
KO	Without connector		—	—	—	●
KVO	Without connector		●	●	●	—

❸ Manual override

Nil	Non-locking push type
E	Push-turn locking type (Manual)

❹ Soft start-up function

Nil	None
S	With soft start-up function

❺ Type of actuation

X660	N.C. (Normally closed)
X661	N.O. (Normally open)

Specifications

Model		VP346E	VP546E	VP746E	VP946E
Fluid		Air			
Type of actuation		N.C. (X660)/N.O. (X661)			
Operating pressure range		0.2 to 0.7 MPa			
Ambient and fluid temperatures		–10 to 50°C (No freezing)			
Max. operating frequency*1	VP(3,5,7)46E	5 Hz			
	VP946E	1 Hz			
Manual override		Non-locking push type Push-turn locking type (Manual)			
Pilot exhaust		Individual exhaust			
Lubrication		Not required			
Impact/Vibration resistance*2		150/30 m/s²			
Enclosure		IP65 (Electrical equipment part only)			
Weight	None	210 g	340 g	710 g	1410 g
	With soft start-up function	310 g	600 g	1260 g	2300 g

*1 Excludes the type with a soft start-up function

*2 Impact resistance: No malfunction occurred when it is tested in the axial direction and at the right angles to the main valve and armature in both energized and de-energized states every once for each condition. (Values at the initial period)
Vibration resistance: No malfunction occurred in a one-sweep test between 45 and 2000 Hz. The test was performed at both energized and de-energized states in the axial direction and at the right angles to the main valve and armature. (Values at the initial period)

* This valve is a large flow rate pilot-operated solenoid valve. If the operating pressure falls below 0.2 MPa due to a pressure drop caused by insufficient air supply, it may not be able to switch properly.

Solenoid Specifications

Coil rated voltage	24 VDC
Allowable voltage fluctuation	±10% of the rated voltage
Power consumption	0.4 W
Surge voltage suppressor	Diode
Indicator light	LED
Electrical entry	M12 connector

Dimensions

N.C. (Normally closed)
VP346E-X660

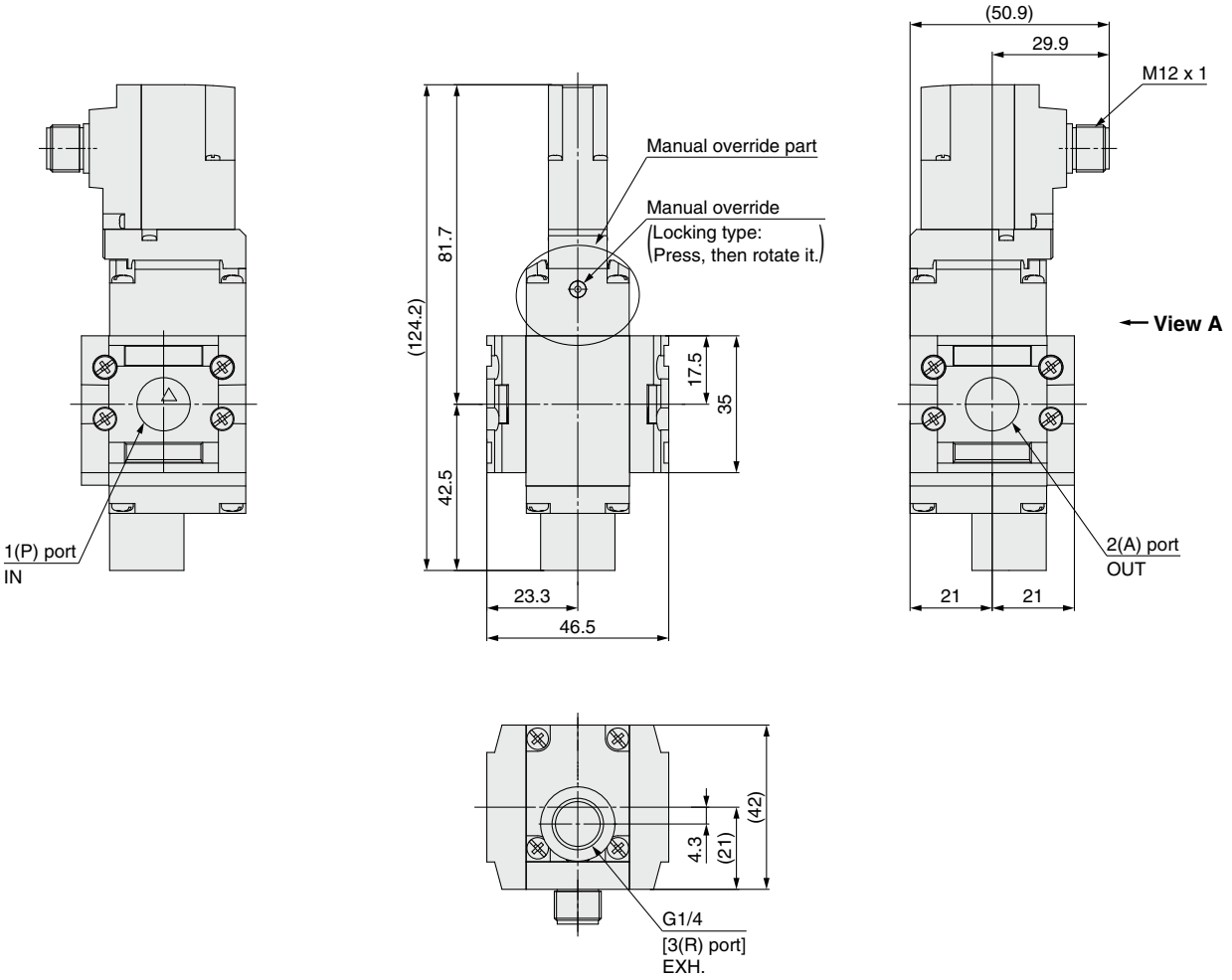

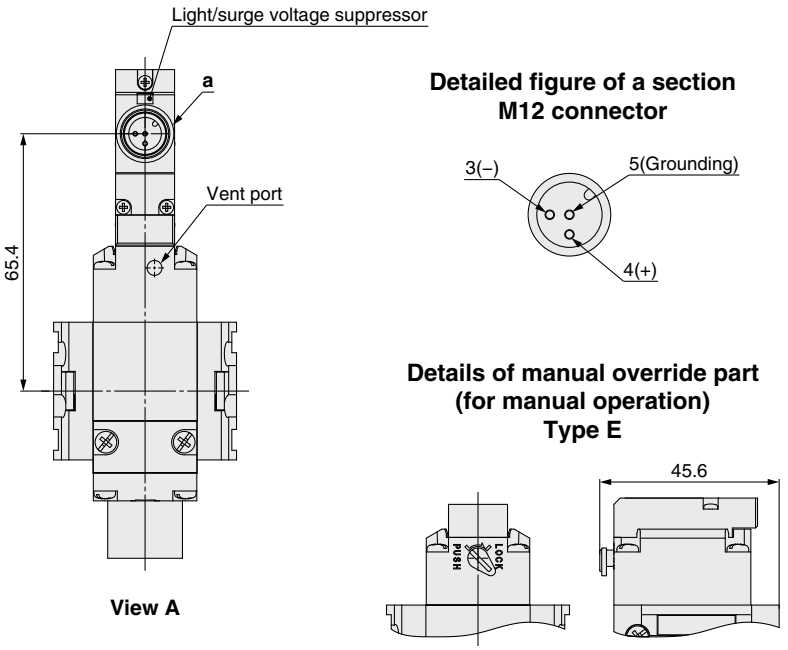

Dimensions

N.O. (Normally open)
VP346E-X661

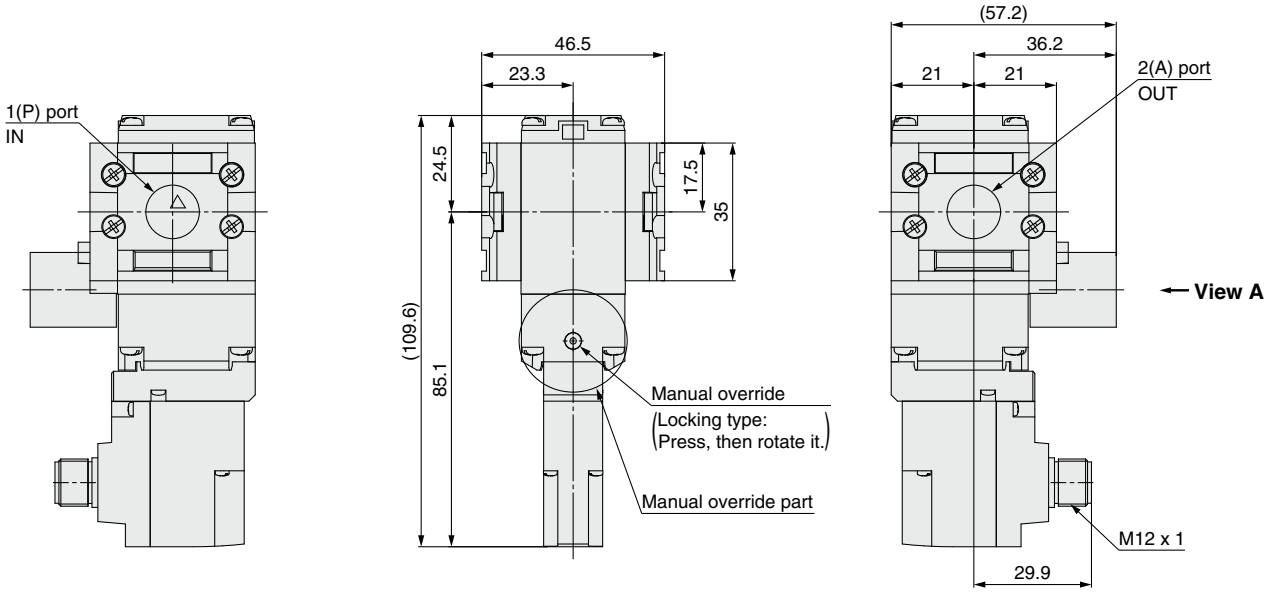

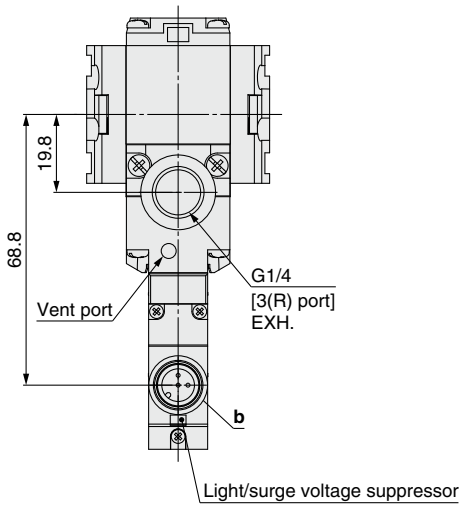

View A

Detailed figure of b section
M12 connector

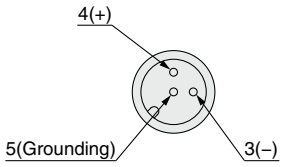

Details of manual override part
(for manual operation)
Type E

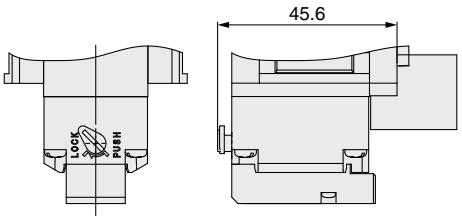

Dimensions

With soft start-up function
N.C. (Normally closed)
VP346E-S-X660

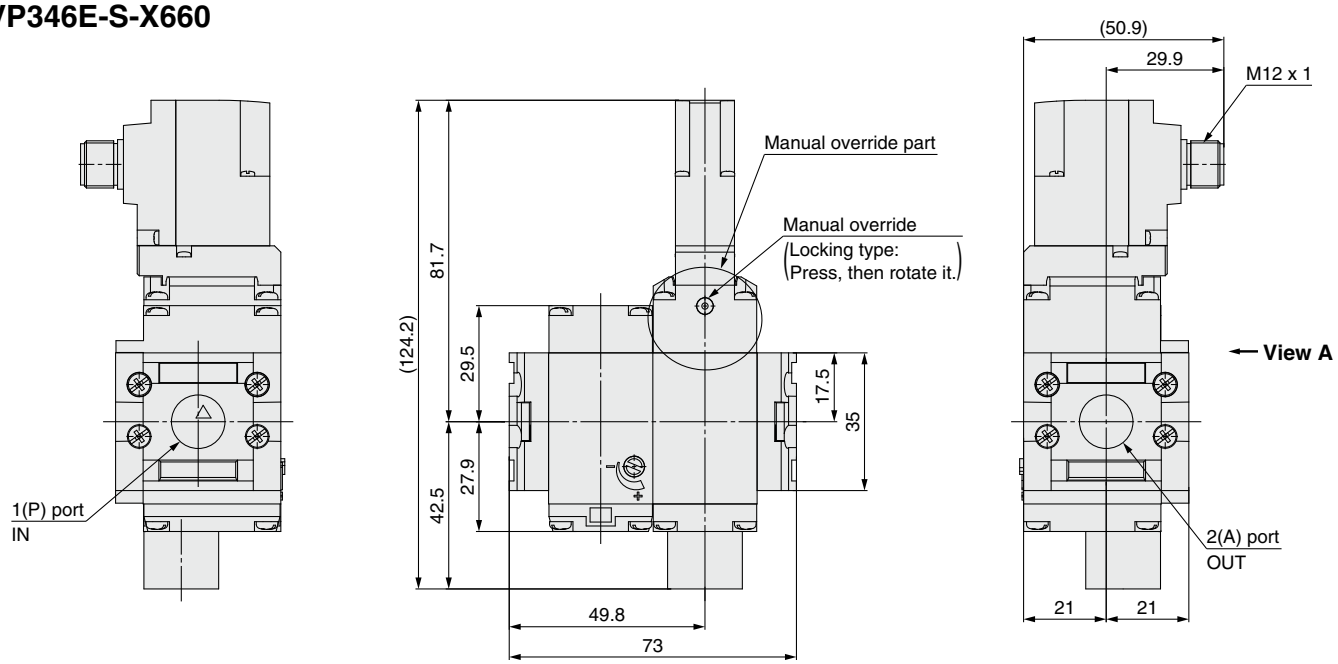

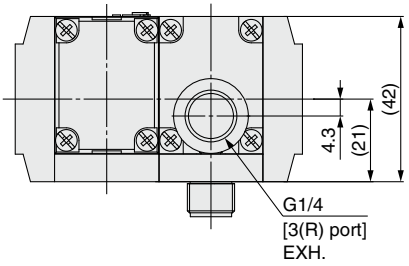

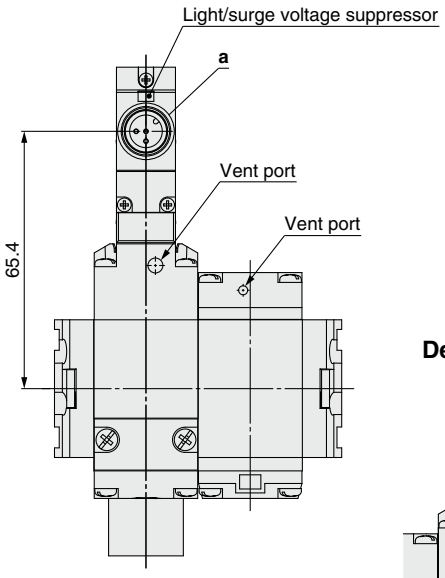

View A

Detailed figure of a section
M12 connector

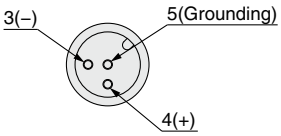

Details of manual override part
(for manual operation)
Type E

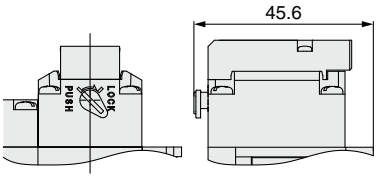

Dimensions

With soft start-up function
N.O. (Normally open)
VP346E-S-X661

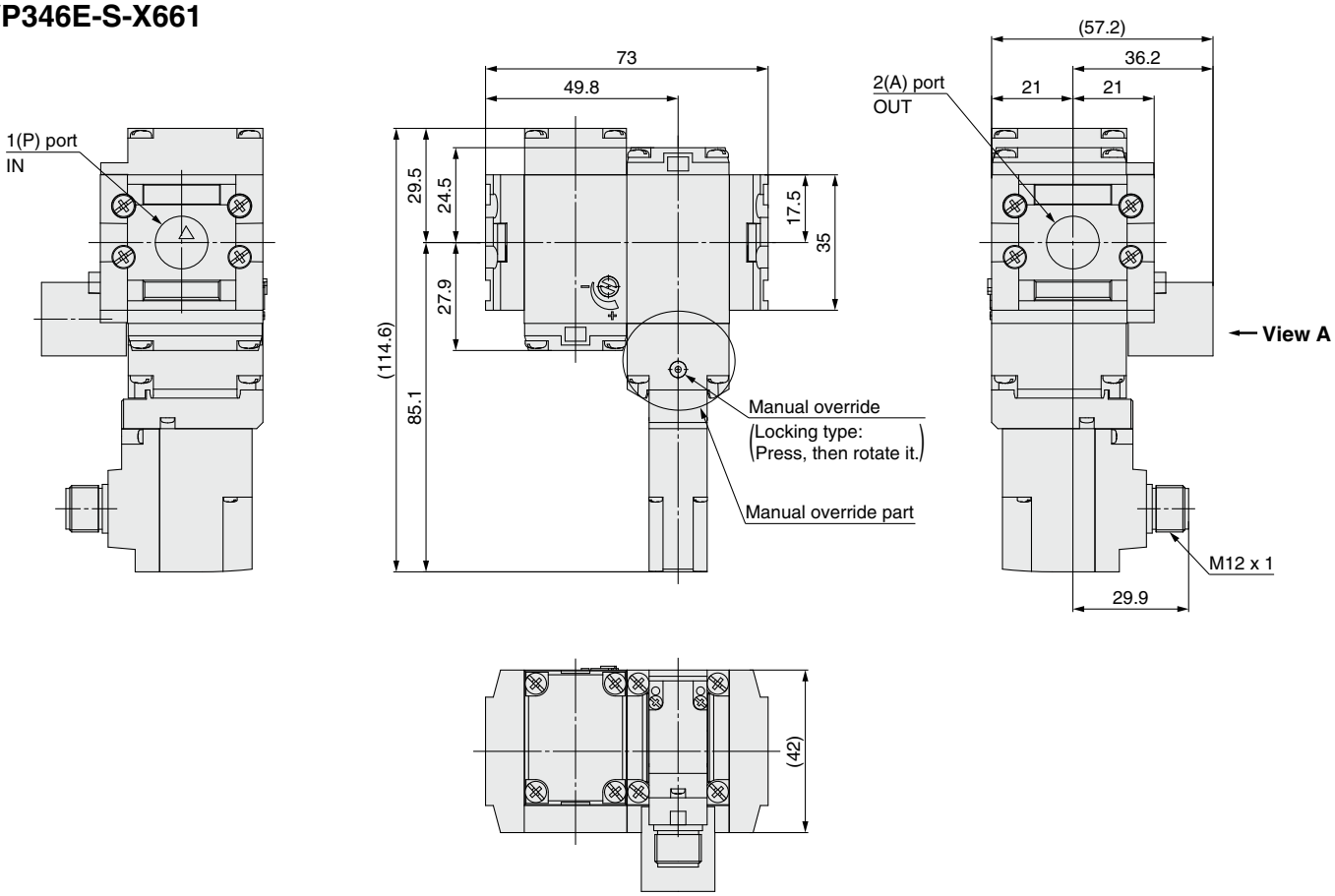

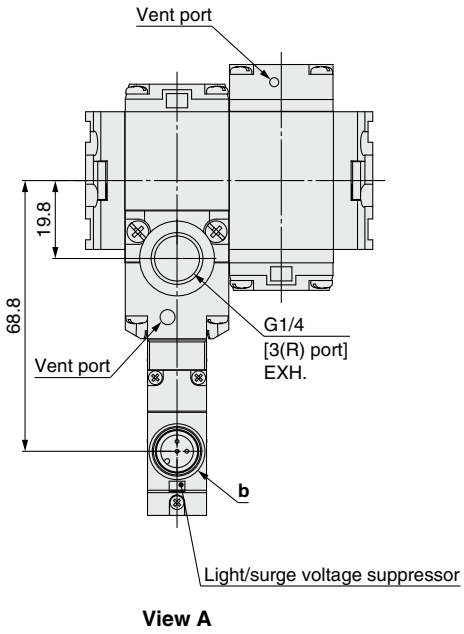

View A

Detailed figure of b section
M12 connector

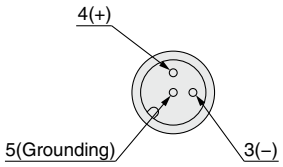

Details of manual override part
(for manual operation)
Type E

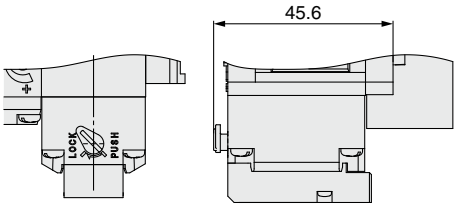

Dimensions

N.C. (Normally closed)
VP546E-X660

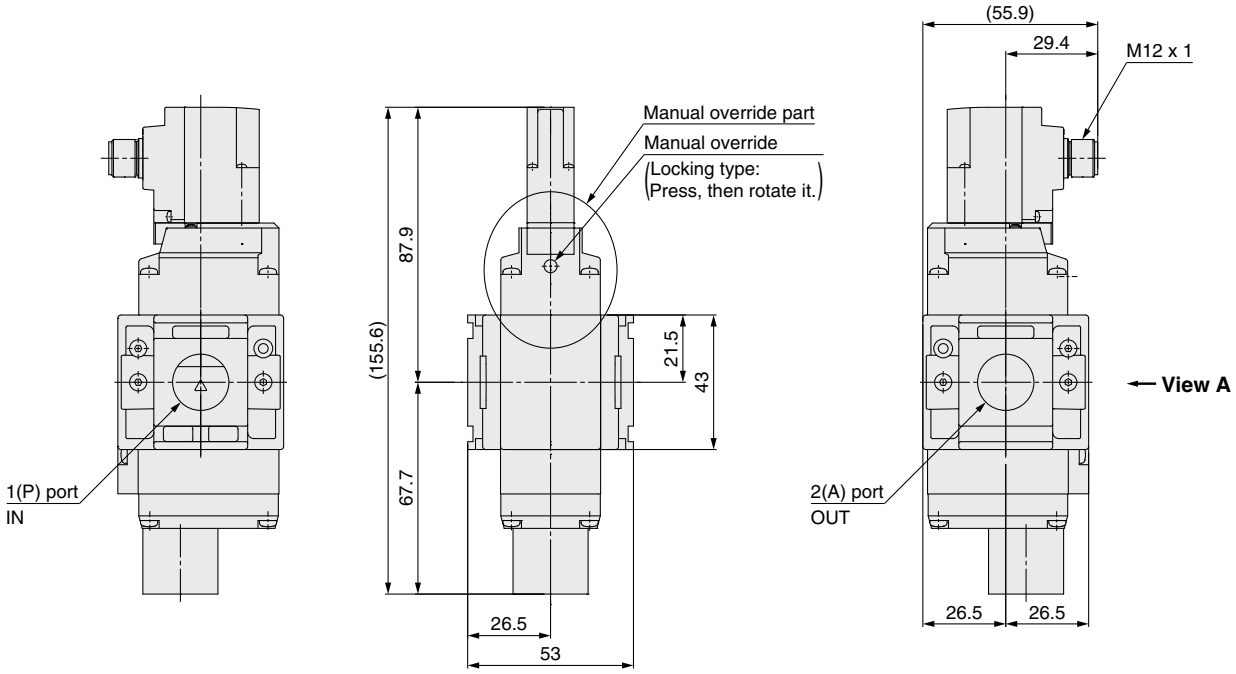

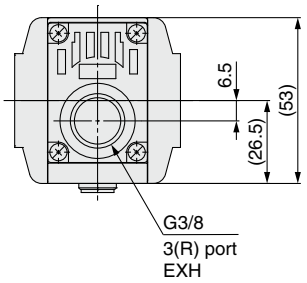

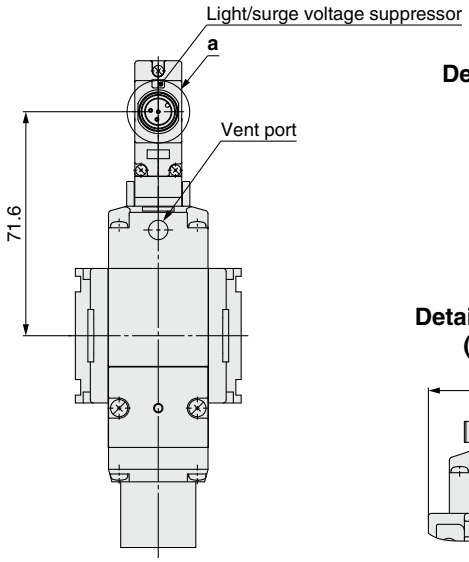

View A

Detailed figure of a section M12 connector

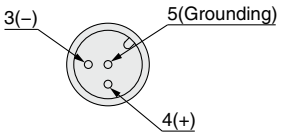

Details of manual override part (for manual operation)

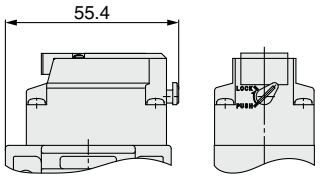

Dimensions

N.O. (Normally open)
VP546E-X661

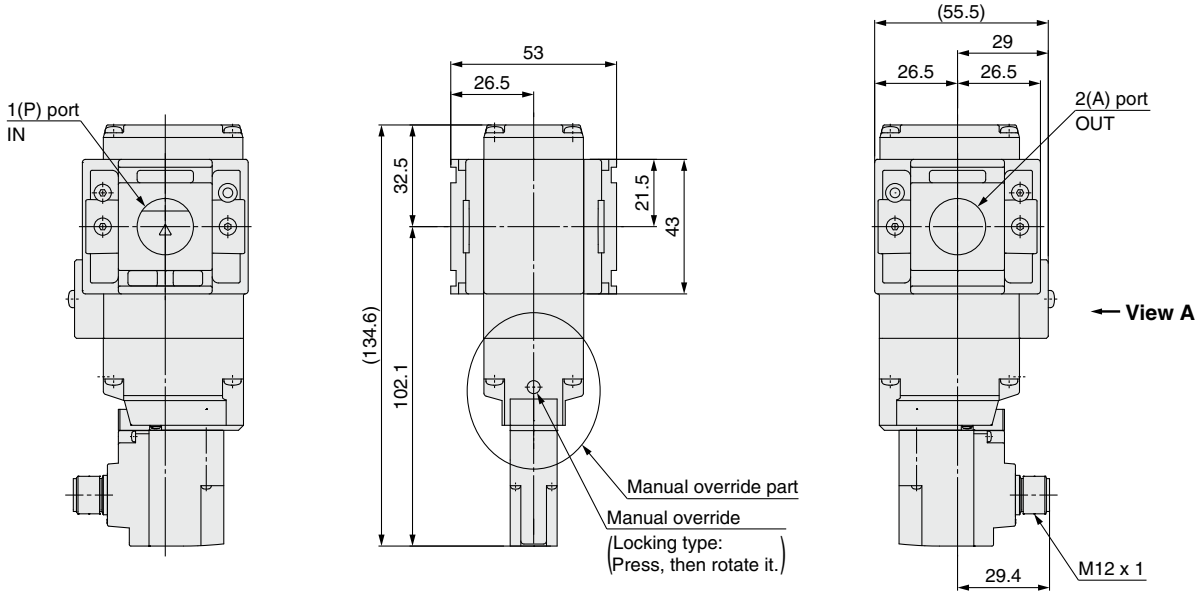

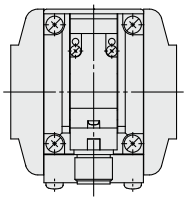

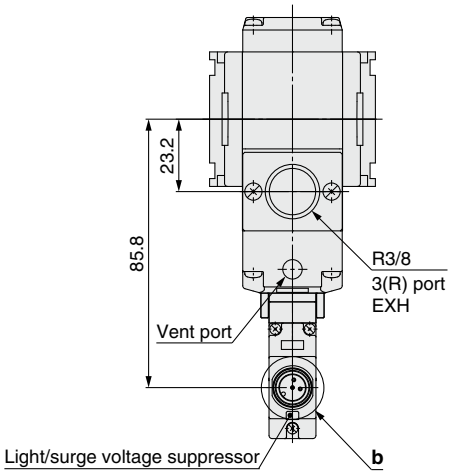

View A

Detailed figure of b section
M12 connector

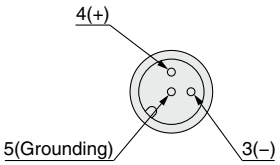

Details of manual override part
(for manual operation)

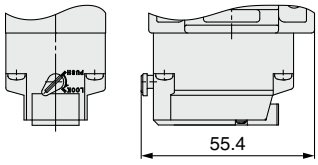

Dimensions

With soft start-up function
N.C. (Normally closed)
VP546E-S-X660

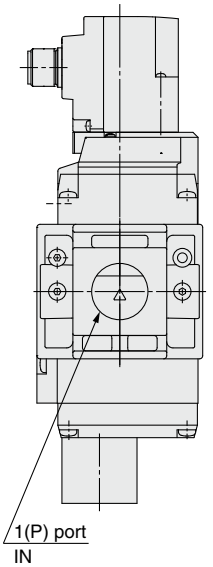

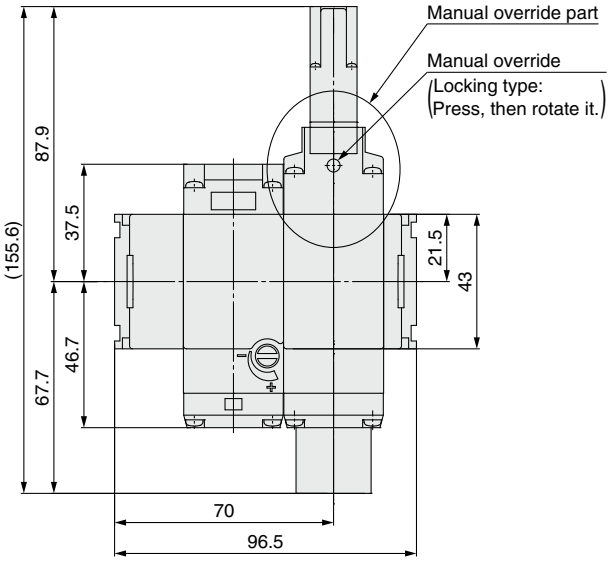

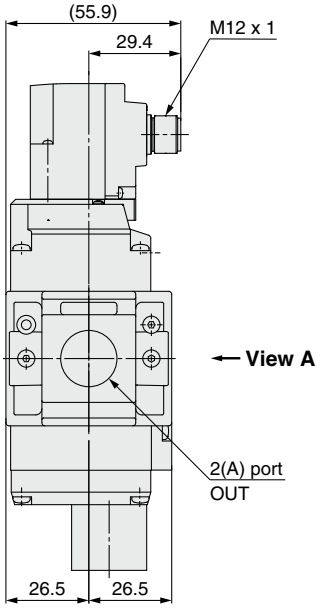

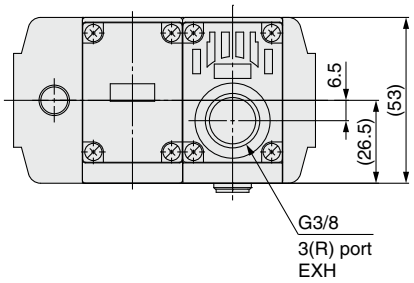

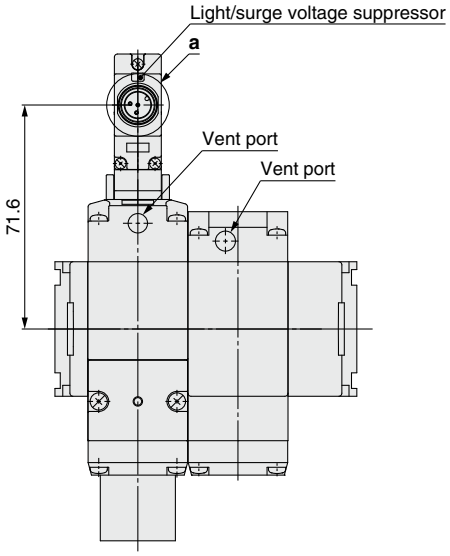

View A

Detailed figure of a section M12 connector

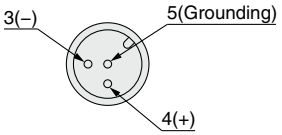

Details of manual override part (for manual operation)

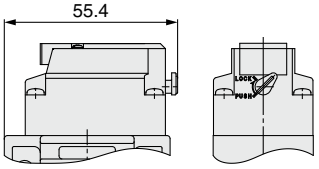

Dimensions

With soft start-up function
N.O. (Normally open)
VP546E-S-X661

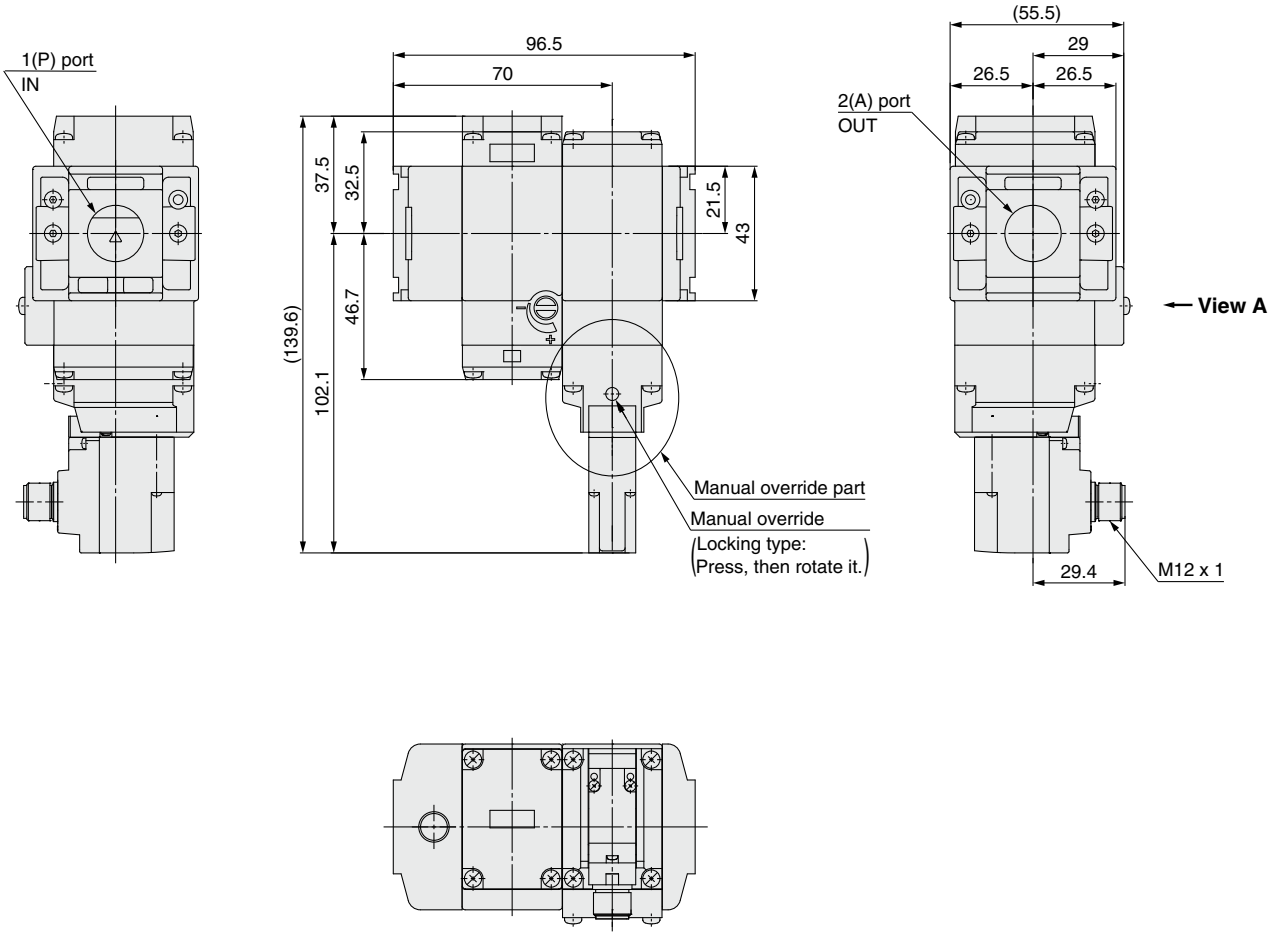

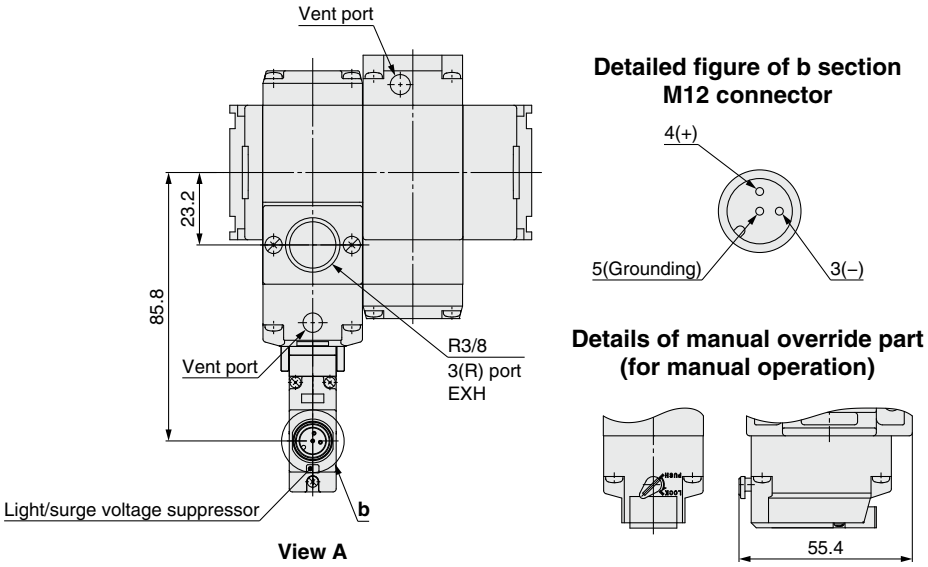

Dimensions

N.C. (Normally closed)
VP746E-X660

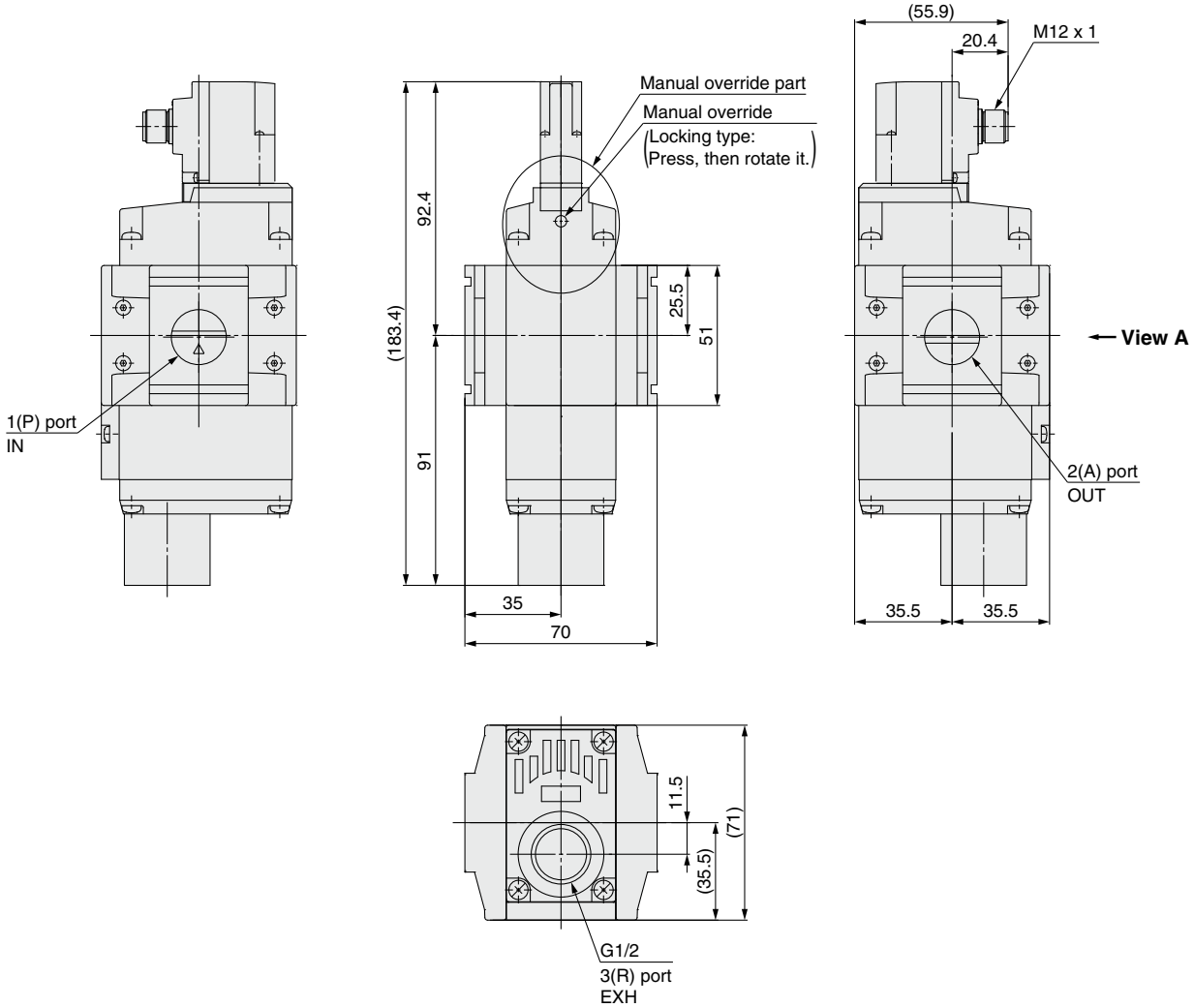

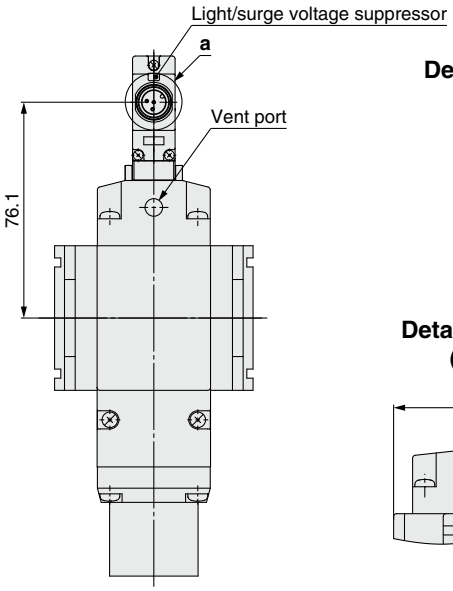

View A

Detailed figure of a section
M12 connector

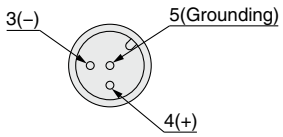

Details of manual override part
(for manual operation)

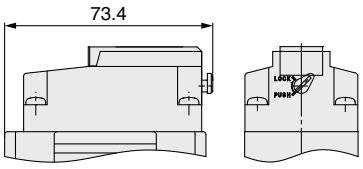

Dimensions

N.O. (Normally open)
VP746E-X661

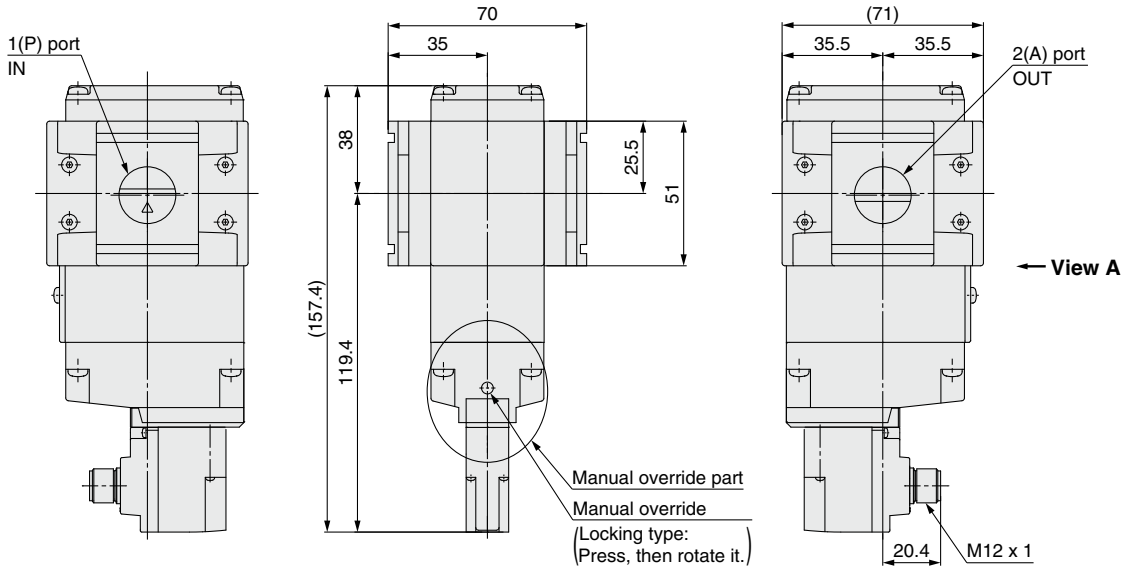

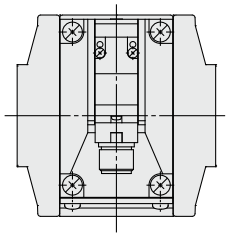

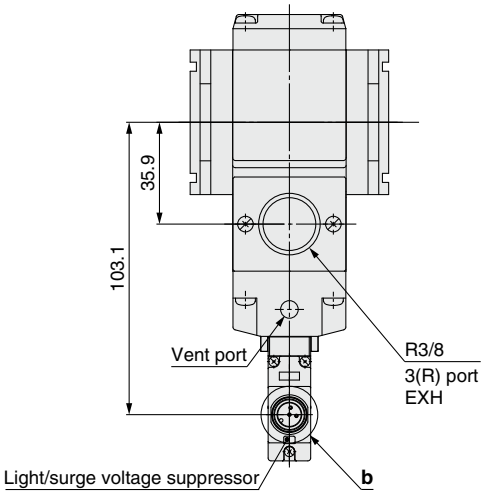

View A

Detailed figure of b section
M12 connector

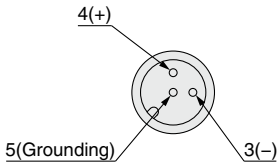

Details of manual override part
(for manual operation)

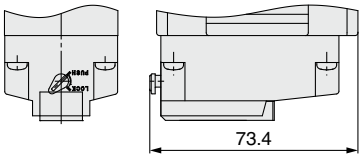

Dimensions

With soft start-up function
N.C. (Normally closed)
VP746E-S-X660

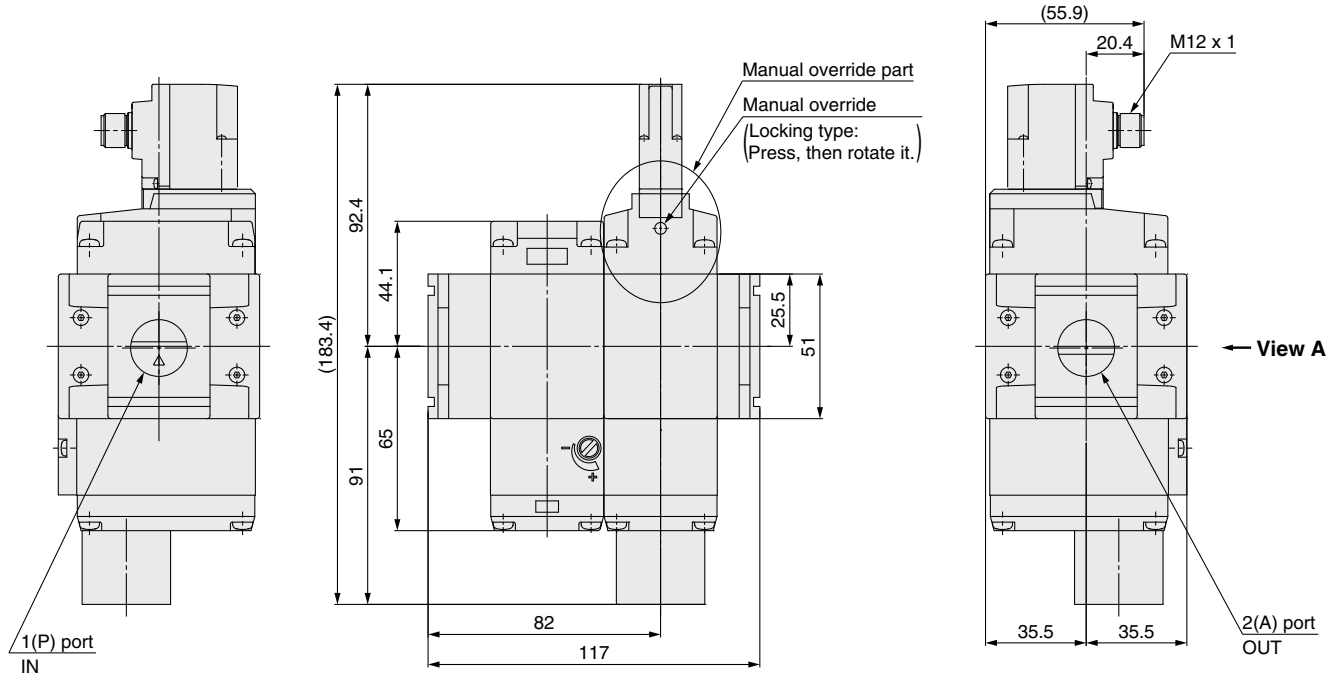

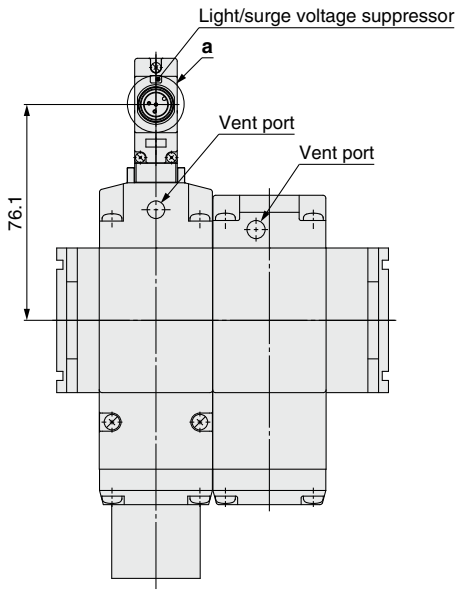

View A

Detailed figure of a section
M12 connector

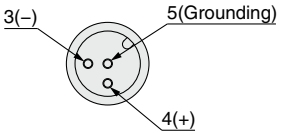

Details of manual override part
(for manual operation)

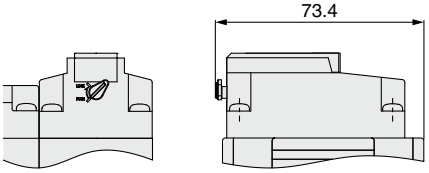

Dimensions

With soft start-up function
N.O. (Normally open)
VP746E-S-X661

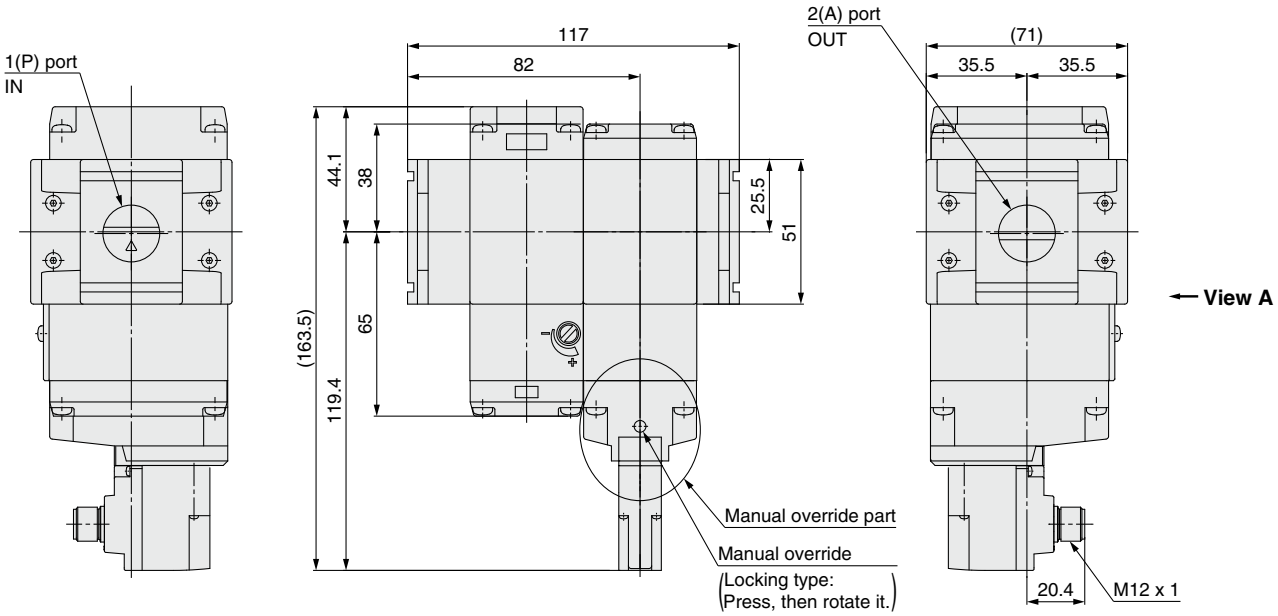

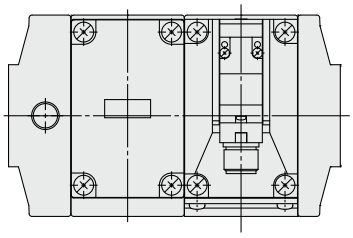

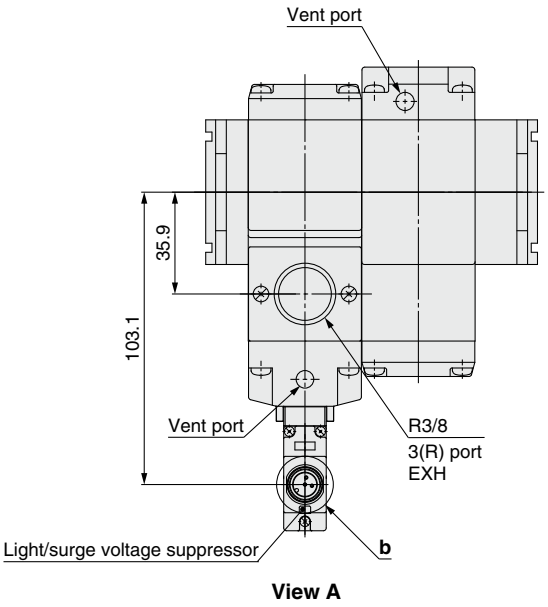

Detailed figure of b section
M12 connector

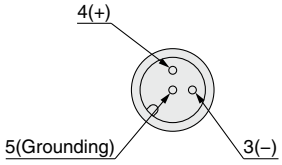

Details of manual override part
(for manual operation)

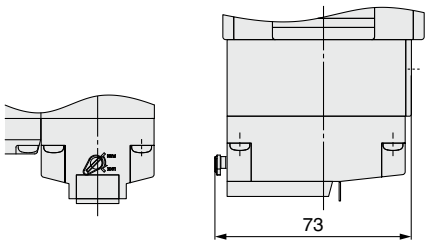

Dimensions

N.C. (Normally closed)
VP946E-X660

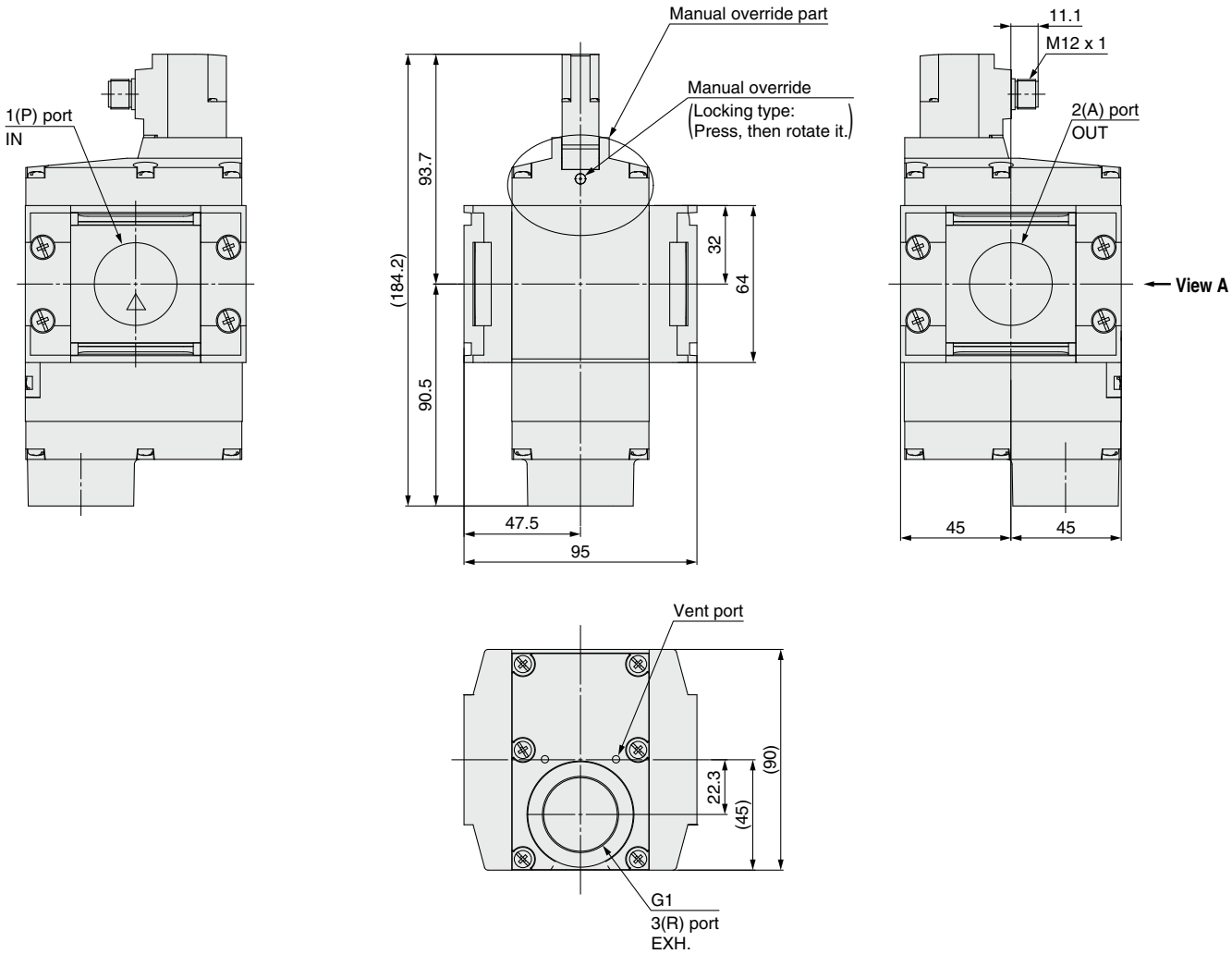

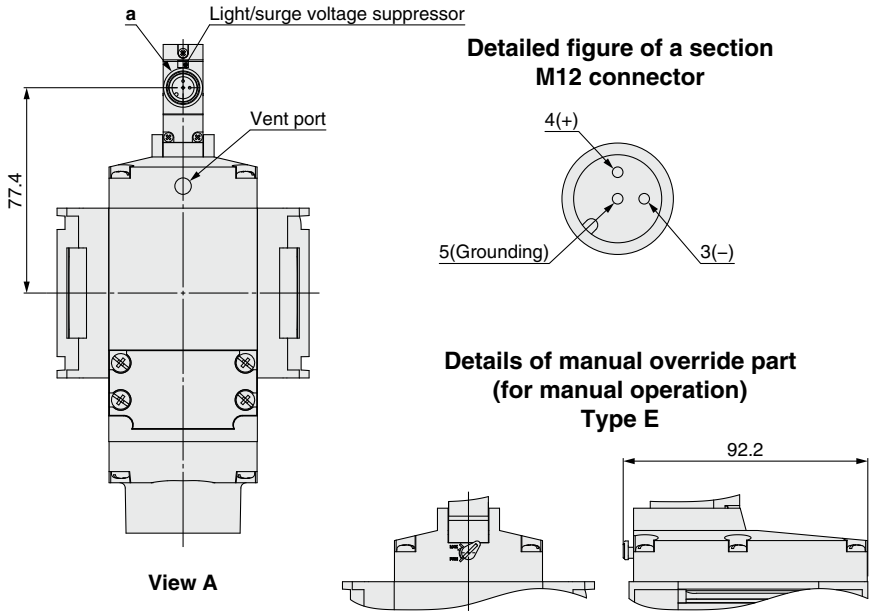

Dimensions

N.O. (Normally open)
VP946E-X661

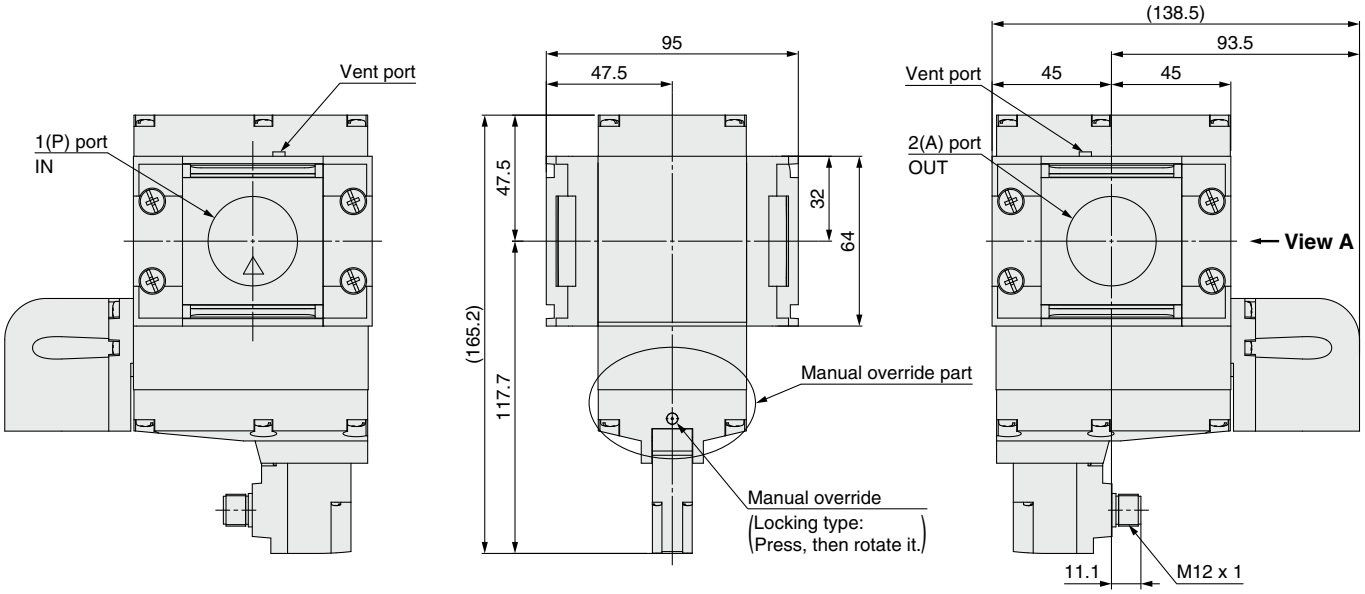

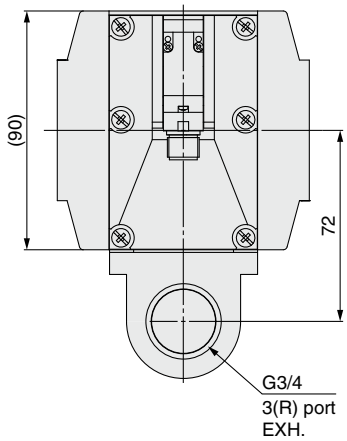

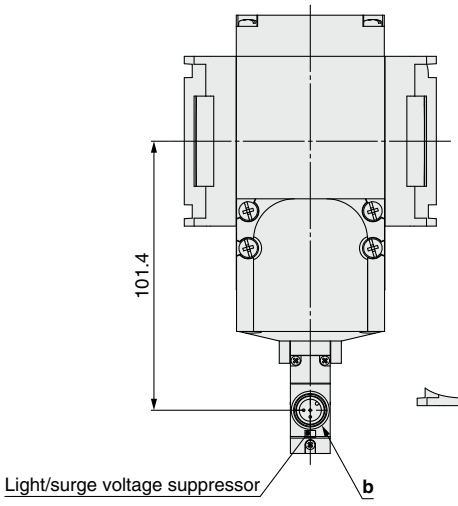

Detailed figure of b section
M12 connector

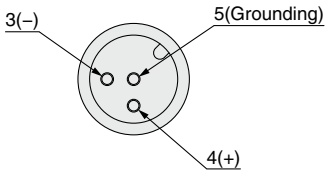

Details of manual override part
(for manual operation)
Type E

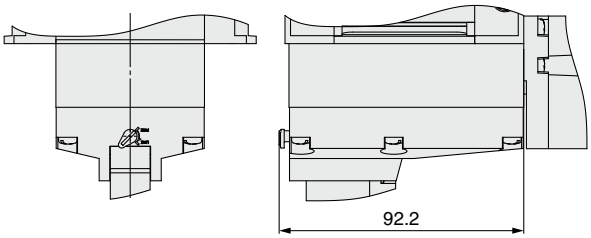

Dimensions

With soft start-up function
N.C. (Normally closed)
VP946E-S-X660

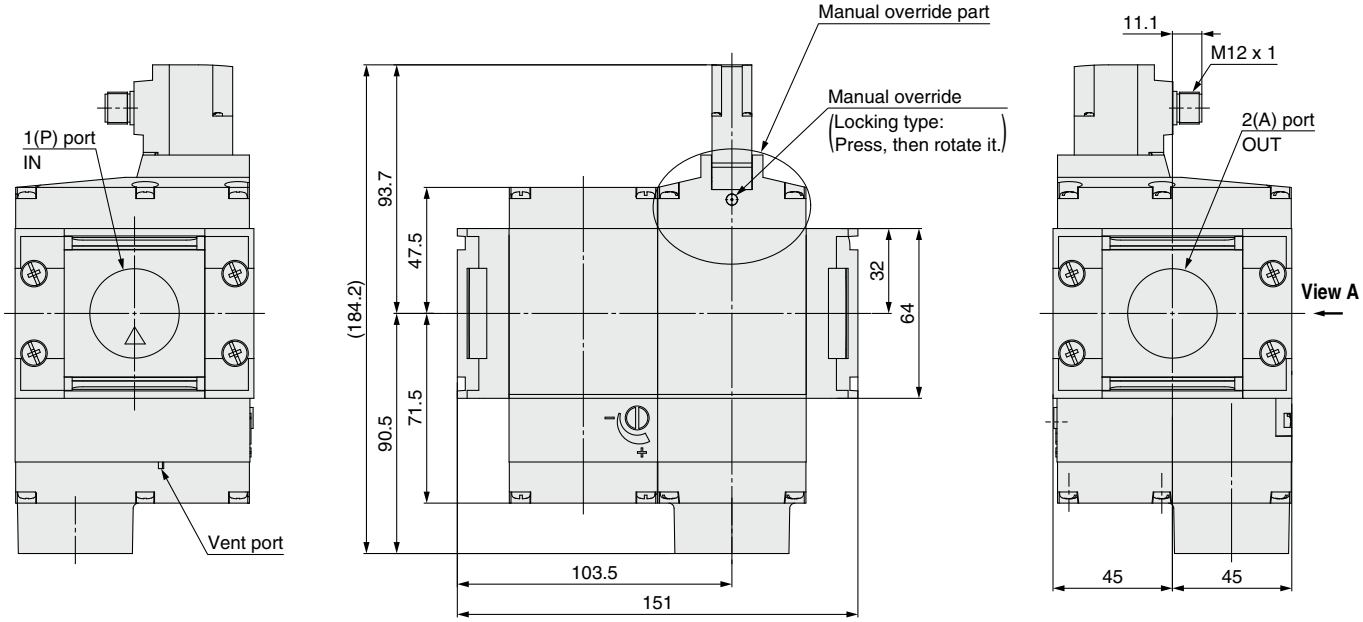

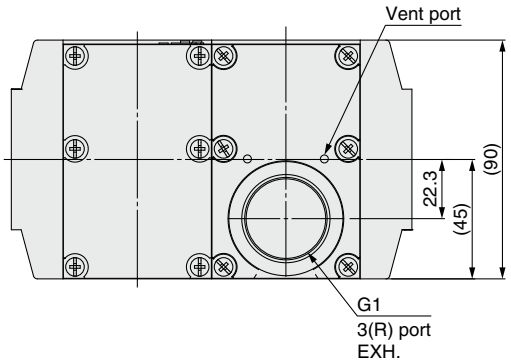

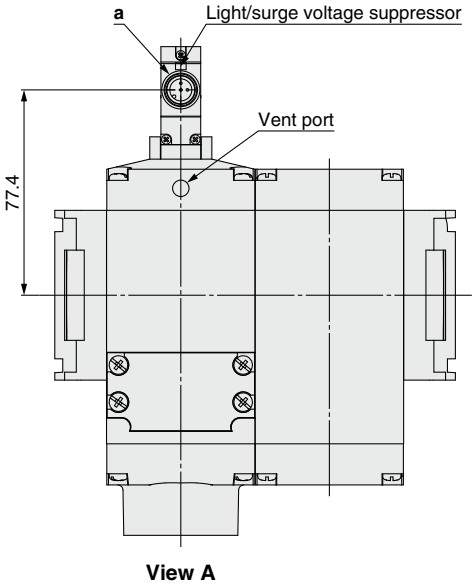

Detailed figure of a section
M12 connector

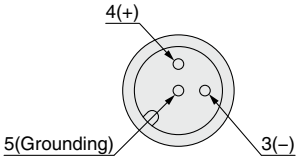

Details of manual override part
(for manual operation)
Type E

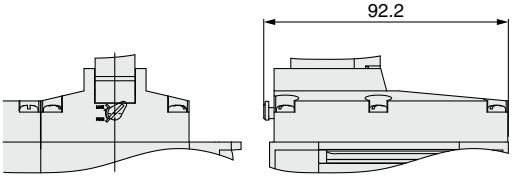

Dimensions

With soft start-up function
N.O. (Normally open)
VP946E-S-X661

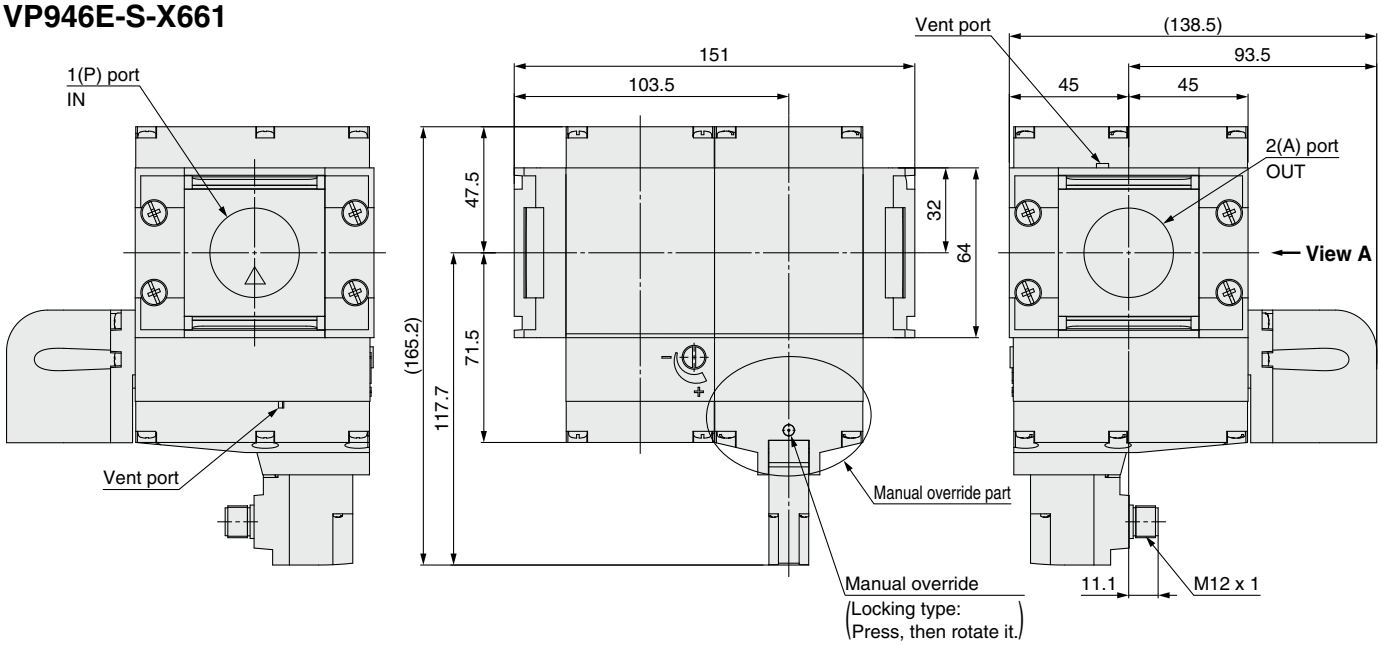

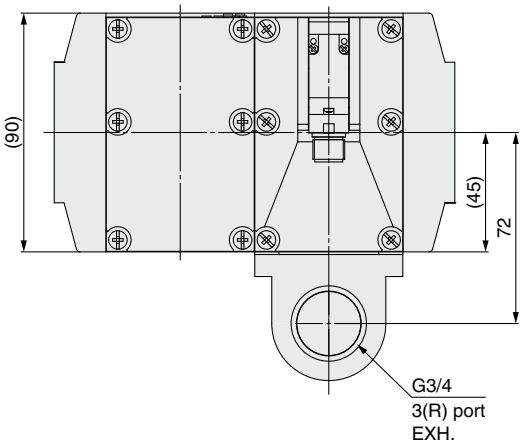

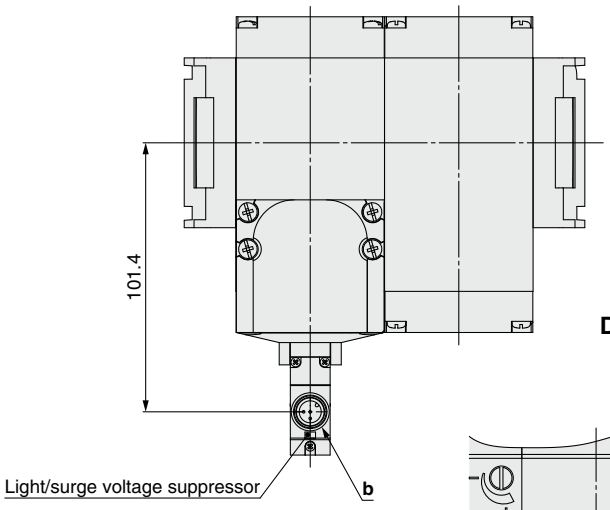

View A

Detailed figure of b section
M12 connector

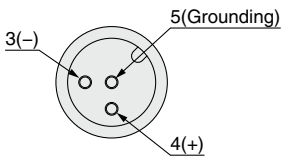

Details of manual override part
(for manual operation)
Type E

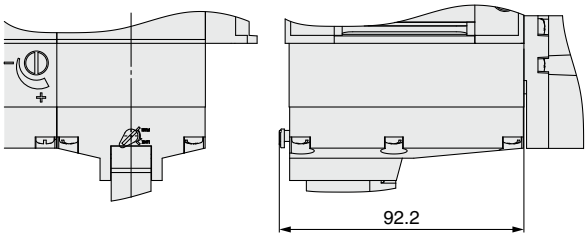

Accessories

List of Accessories

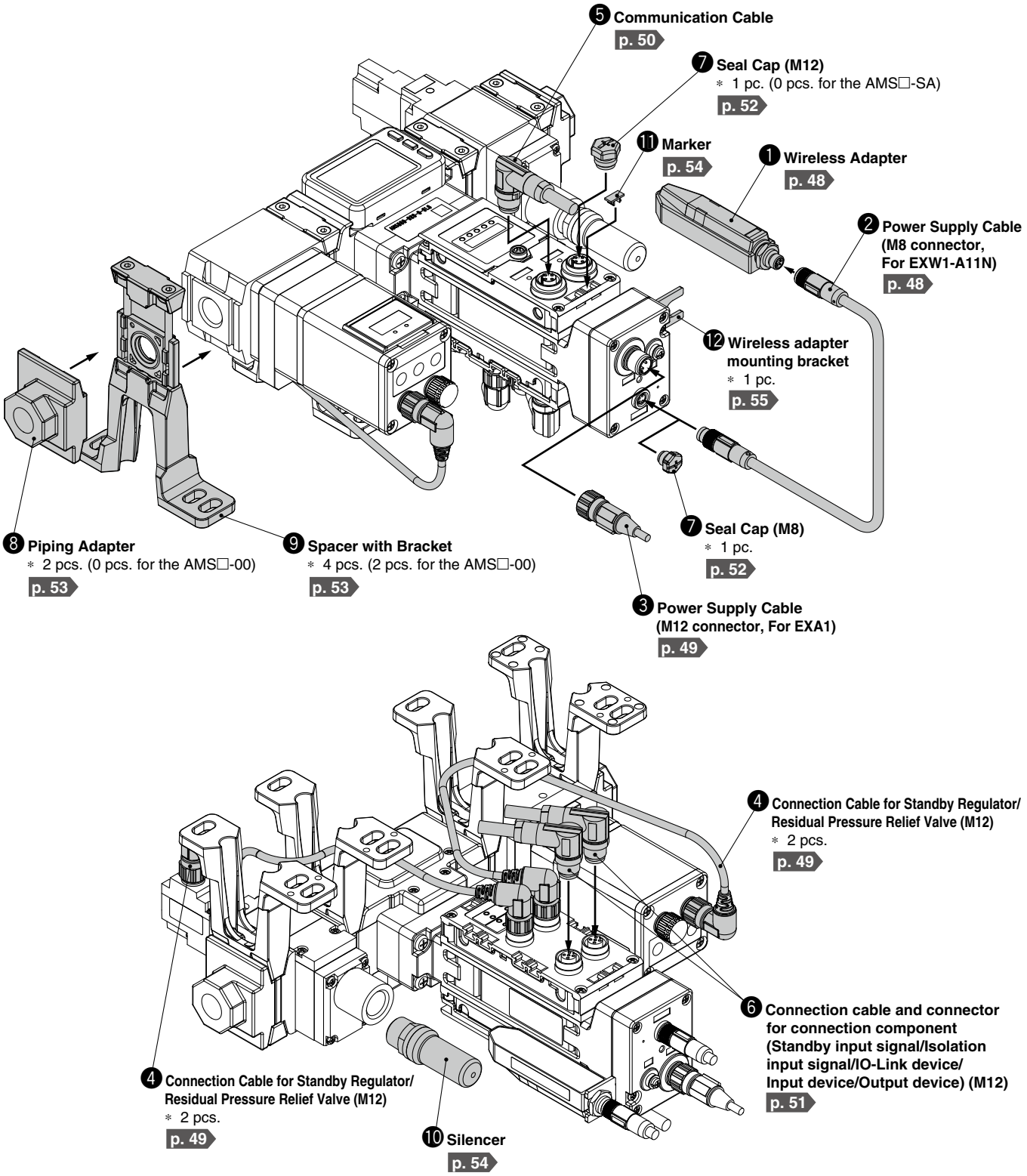

∗ The number of pieces included for the AMS model

❶ Wireless Adapter

Wireless adapter for air management hub EXA1
A wireless adapter needs to be connected to both the wireless base and the wireless remote.

EXW1-A11N

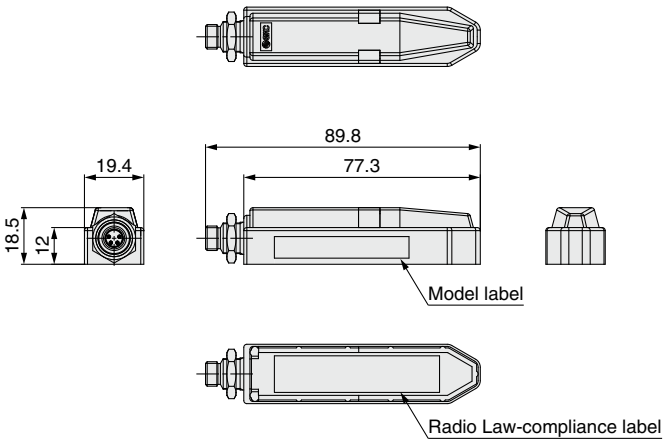

Specifications

Item		Specifications
Wireless communication	Protocol	SMC original protocol (SMC encryption)
	Radio wave type (spread)	Frequency Hopping Spread Spectrum (FHSS)
	Frequency	2.4 GHz (2403 to 2481 MHz)
	Number of frequency channels	79 ch
	Channel bandwidth	1.0 MHz
	Communication speed	1 Mbps
	Communication distance	Approx. 100 m (Depending on the operating environment)
	Radio Law certificate	Refer to the SMC website for the latest information regarding in which countries the product is certified.
Electrical	Power supply voltage range	24 VDC +10%
	Current consumption	50 mA or less
General	Enclosure	IP67
	Ambient temperature (Operating temperature)	0 to 50°C
	Ambient temperature (Storage temperature)	−10 to 60°C
	Ambient humidity	35 to 85%RH (No condensation)
	Withstand voltage	500 VAC, 1 min
	Insulation resistance	500 VDC, 10 MΩ or more
	Vibration resistance	Conforms to EN 61131-2 5 < = f < 8.4 Hz 3.5 mm 8.4 < = f < 150 Hz 9.8 m/s²
	Impact resistance	Conforms to EN 61131-2 147 m/s², 11 ms
	Standards	CE/UKCA marking, UL (CSA)*1
	Weight	40 g

*1 UL (CSA) compliance applies only when connected to an EXA1 air management hub.
*2 Please purchase an EXW1-AC-X1 connection cable separately.

Connector

M8, 4-pin, plug	Terminal no.	Description
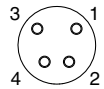	1	24V (US1)
	2	Internal bus B
	3	0V (US1)
	4	Internal bus A

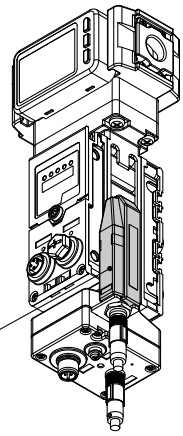

Wireless adapter
* Included parts: Fixing bracket

❷ Power Supply Cable [M8 connector, For EXW1-A11N, With connectors on both sides (socket/plug)]

EXW1-AC1-X1 Straight 0.3 m

* This product must be used in a fixed position.

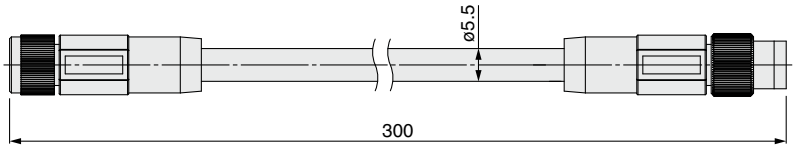

Socket connector pin arrangement

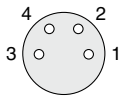

Terminal no. | Terminal no.

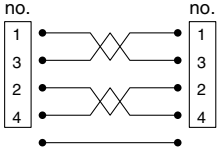

Connections

Plug connector pin arrangement

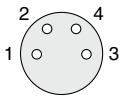

Item	Specifications
Cable O.D.	ø5.5 mm
Conductor nominal cross section	AWG24
Wire O.D. (Including insulator)	1.12 mm
Min. bending radius	22 mm

❸ Power Supply Cable (M12 connector, For EXA1)

∗ The shape of the M12 connector is A-coded (Normal key).

EX500-AP 050 - S

Cable length (L)

010	1000 mm
050	5000 mm

Connector specification

S	Straight
A	Angled

Straight connector type

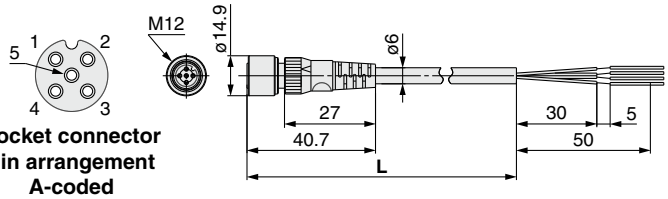

Socket connector pin arrangement A-coded (Normal key)

Item	Specifications
Cable O.D.	ø6 mm
Nominal cross section	0.3 mm²/AWG22
Wire diameter (Including insulator)	1.5 mm
Min. bending radius	40 mm (Fixed)

Angled connector type

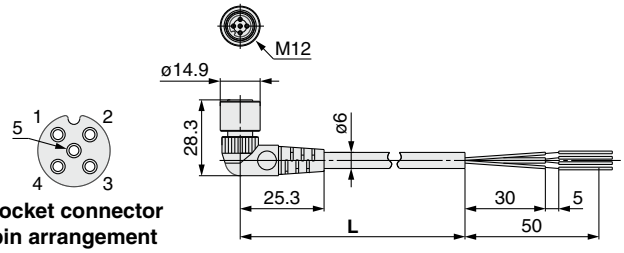

Socket connector pin arrangement A-coded (Normal key)

Item	Specifications
Cable O.D.	ø6 mm
Nominal cross section	0.3 mm²/AWG22
Wire diameter (Including insulator)	1.5 mm
Min. bending radius	40 mm (Fixed)

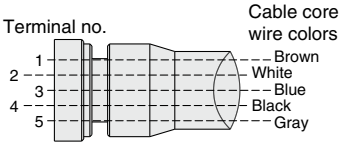

Connections

ZS-37-A
Lead wire with M12 connector

Pin no.	Pin name	Wire color
1	DC(+)	Brown
2	N.C.	White
3	DC(–)	Blue
4	N.C.	Black

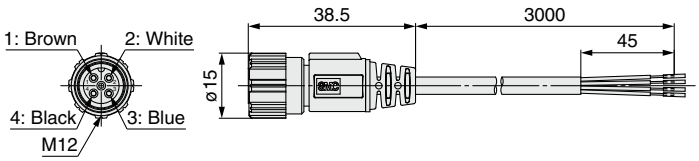

Cable Specifications

Item		Specifications
Conductor	**Nominal cross section**	AWG23
Insulator	**Outside diameter**	Approx. 1.1 mm
	Color	Brown, Blue, Black, White
Sheath	**Finished outside diameter**	ø4

❹ Connection Cable for Standby Regulator/Residual Pressure Relief Valve [With M12 angle connectors on both sides (male/female)]

∗ Included with AMS□A/B air management systems

EXA1-AC1 Cable length L: 320 mm
EXA1-AC2 Cable length L: 220 mm

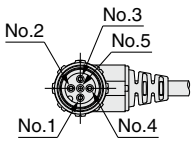

M12 5-pin female connector pin assignment

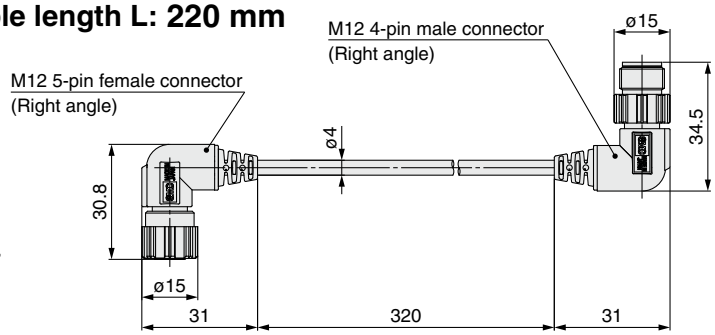

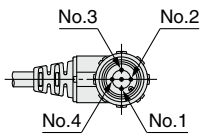

M12 4-pin male connector pin assignment

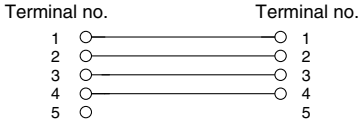

Connections

Component and Connection Cable Suitable Table

Body size	Standby electro-pneumatic regulator	Standby regulator	Residual pressure relief valve
20	EXA1-AC1	EXA1-AC2	EXA1-AC2
30			
40			
60			EXA1-AC1

❺ Communication Cable

For EtherCAT® **For PROFINET** **For EtherNet/IP™**

EX9-AC 005 EN-PSPS (With connector on both sides (Plug/Plug))

Cable length (L)

005	500 mm
010	1000 mm
020	2000 mm
030	3000 mm
050	5000 mm
100	10000 mm

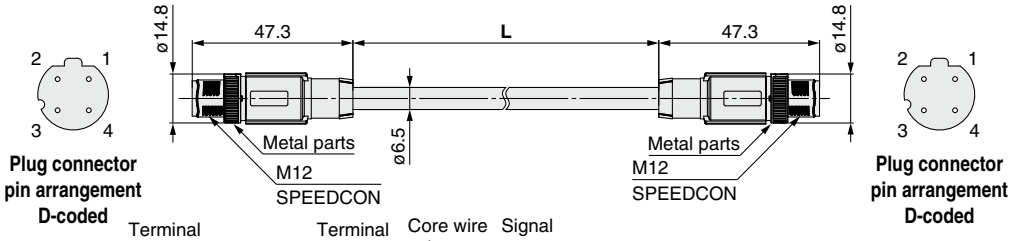

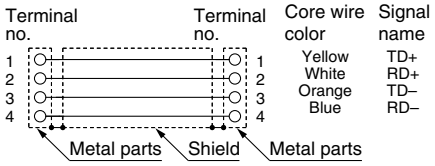

Connections (Straight cable)

Item	Specifications
Cable O.D.	ø6.5 mm
Conductor nominal cross section	0.34 mm²/AWG22
Wire O.D. (Including insulator)	1.55 mm
Min. bending radius (Fixed)	19.5 mm

EX9-AC 005 EN-PAPA (With angled connector on both sides (Plug/Plug))

Cable length (L)

005	500 mm
010	1000 mm
020	2000 mm
030	3000 mm
050	5000 mm
100	10000 mm

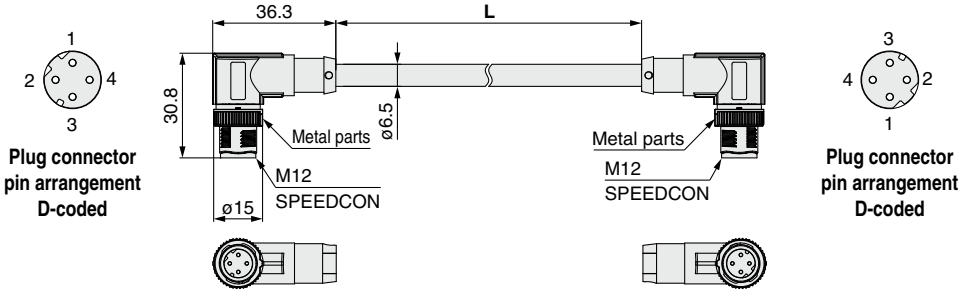

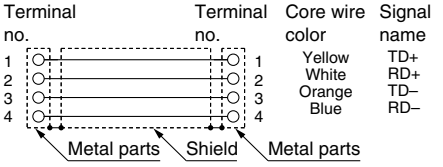

Connections (Straight cable)

Item	Specifications
Cable O.D.	ø6.5 mm
Conductor nominal cross section	0.34 mm²/AWG22
Wire O.D. (Including insulator)	1.55 mm
Min. bending radius (Fixed)	19.5 mm

❺ Communication Cable

For EtherCAT® **For PROFINET** **For EtherNet/IP™**

EX9-AC 020 EN-PSRJ (Plug/RJ-45 connector)

Cable length (L)

010	1000 mm
020	2000 mm
030	3000 mm
050	5000 mm
100	10000 mm

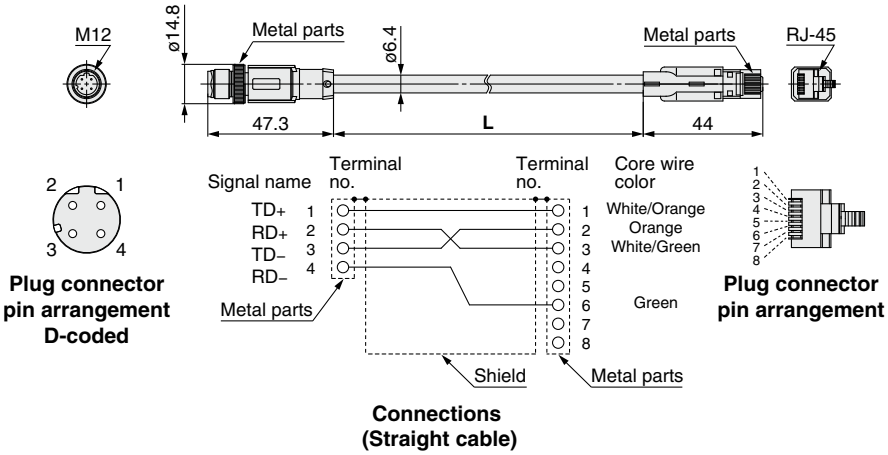

Item	Specifications
Cable O.D.	ø6.4 mm
Conductor nominal cross section	0.14 mm²/AWG26
Wire O.D. (Including insulator)	0.98 mm
Min. bending radius (Fixed)	26 mm

PCA-1446566 (Plug)

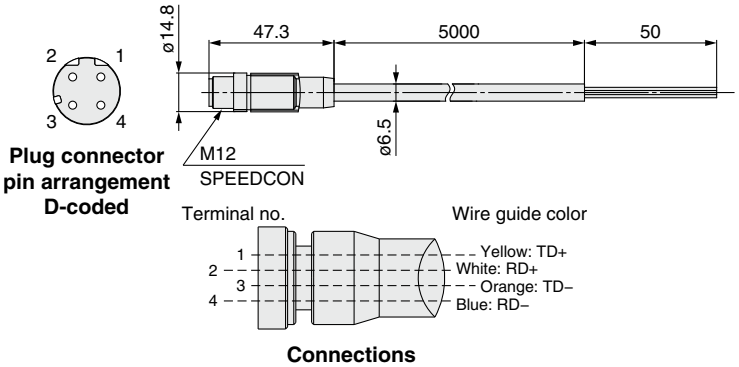

Item	Specifications
Cable O.D.	ø6.5 mm
Conductor nominal cross section	AWG22
Wire O.D. (Including insulator)	1.55 mm
Min. bending radius (Fixed)	45.5 mm

❻ Connection cable and connector for connection component (Standby input signal/Isolation input signal/IO-Link device/Input device/Output device) (M12)

IO-Link Device Cable

EX9-AC 005 -SSPS (With connector on both sides (Socket/Plug))

Cable length (L)

005	500 mm
010	1000 mm
020	2000 mm
030	3000 mm
050	5000 mm
100	10000 mm

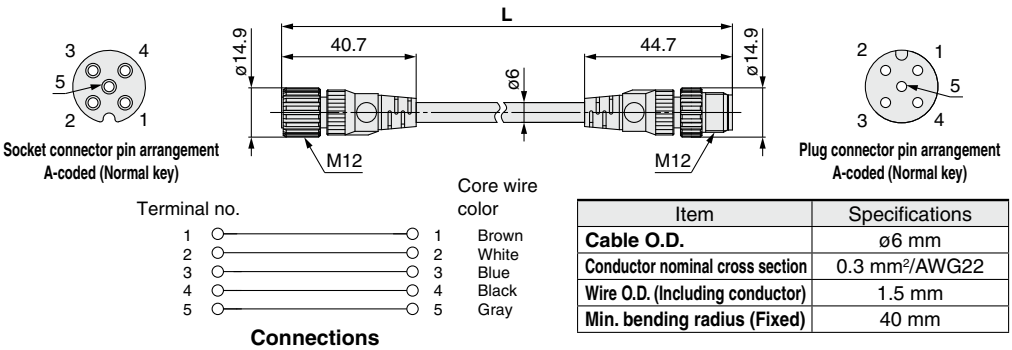

Item	Specifications
Cable O.D.	ø6 mm
Conductor nominal cross section	0.3 mm²/AWG22
Wire O.D. (Including conductor)	1.5 mm
Min. bending radius (Fixed)	40 mm

❻ Connection cable and connector for connection component (Standby input signal/Isolation input signal/IO-Link device/Input device/Output device) (M12)

IO-Link Device Cable

EX9-AC 005 -SAPA (With connector on both sides (Socket/Plug))

Cable length (L)

005	500 mm
010	1000 mm
020	2000 mm
030	3000 mm
050	5000 mm
100	10000 mm

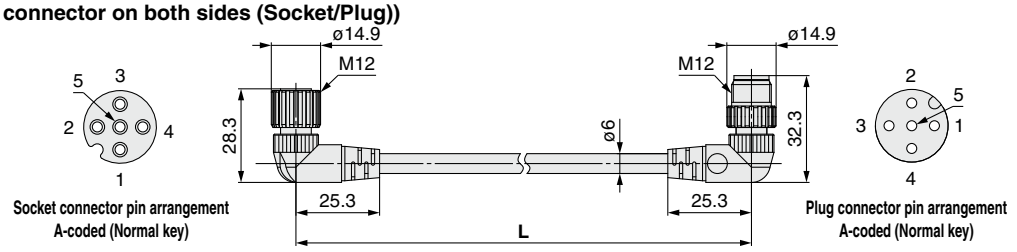

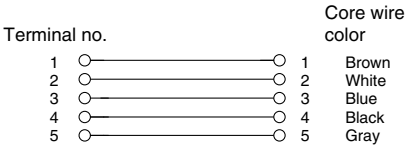

Connections

Item	Specifications
Cable O.D.	ø6 mm
Conductor nominal cross section	0.3 mm²/AWG22
Wire O.D. (Including conductor)	1.5 mm
Min. bending radius (Fixed)	40 mm

EX9-AC 030 -7

Cable length (L)

010	1000 [mm]
030	3000 [mm]

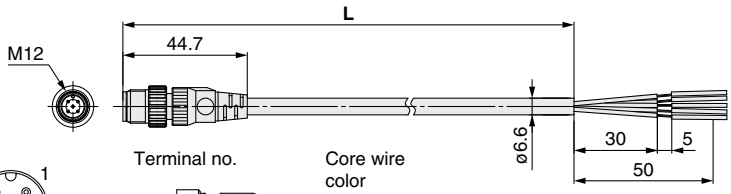

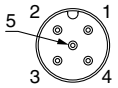

Plug connector pin arrangement

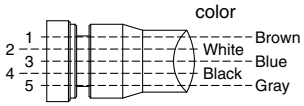

Connections

Item	Specifications
Cable O.D.	ø6.6 mm
Conductor nominal cross section	0.3 mm²/AWG22
Wire O.D. (Including conductor)	1.65 mm
Min. bending radius (Fixed)	40 mm

Standby input signal/Isolation input signal/Input device/Output device

Name	Use	Part no.	Description
Cable with connector	For sensor 	**PCA-1557769**	Cable with M12 connector (4 pins/3 m)
Field-wireable connector	For sensor 	**PCA-1557743**	Field-wireable connector (M12/4 pins/Plug/QUICKON-ONE connection/SPEEDCON)
		PCA-1557756	
Y connector	For sensor 	**PCA-1557785**	Y connector (2 x M12 (5 pins)-M12 (5 pins)/SPEEDCON)
		PCA-1557798	Y connector (2 x M8 (3 pins)-M12 (4 pins)/SPEEDCON)

∗ When using the Y connector, connect it to the connector on the I/O unit through the sensor cable (PCA-1557769) with the M12 connector.

❼ Seal Cap (10 pcs.)

Be sure to mount a seal cap on any unused I/O connectors.
Otherwise, the specified enclosure cannot be maintained.

EX9-AWES
For M8

EX9-AWTS
For M12

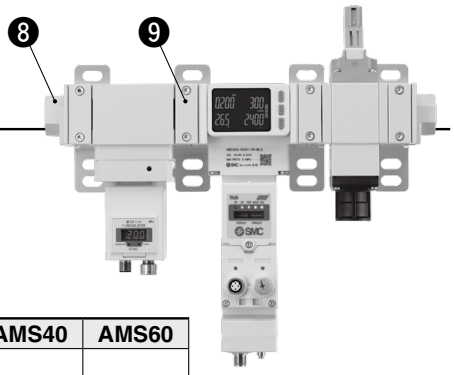

❽ Piping Adapter

A piping adapter allows for the installation/removal of the component without removing the piping and thus makes maintenance easier.

E 200 - □ 01 -D

Applicable size

200	AMS20
300	AMS30
400	AMS40
600	AMS60

Thread type

Symbol	Thread type
Nil	Rc
F	G
N	NPT

Port size

Symbol	Port size	AMS20	AMS30	AMS40	AMS60
01	1/8	●			
02	1/4	●	●		
03	3/8		●	●	
04	1/2			●	
06	3/4				●
10	1				●

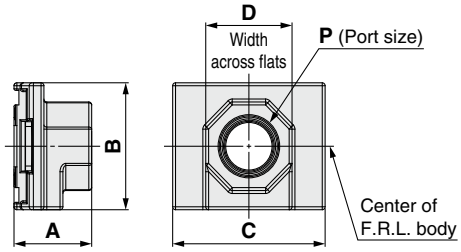

Model	P	A	B	C	D
E200-□01-D	1/8	24	35	42	24
E200-□02-D	1/4	24	35	42	24
E300-□02-D	1/4	27	43	53	30
E300-□03-D	3/8	27	43	53	30
E400-□03-D	3/8	30	51	71	36
E400-□04-D	1/2	30	51	71	36
E600-□06-D	3/4	39	64	90	46
E600-□10-D	1	39	64	90	46

∗ A spacer with bracket is required for modular unit.

❾ Spacer with Bracket

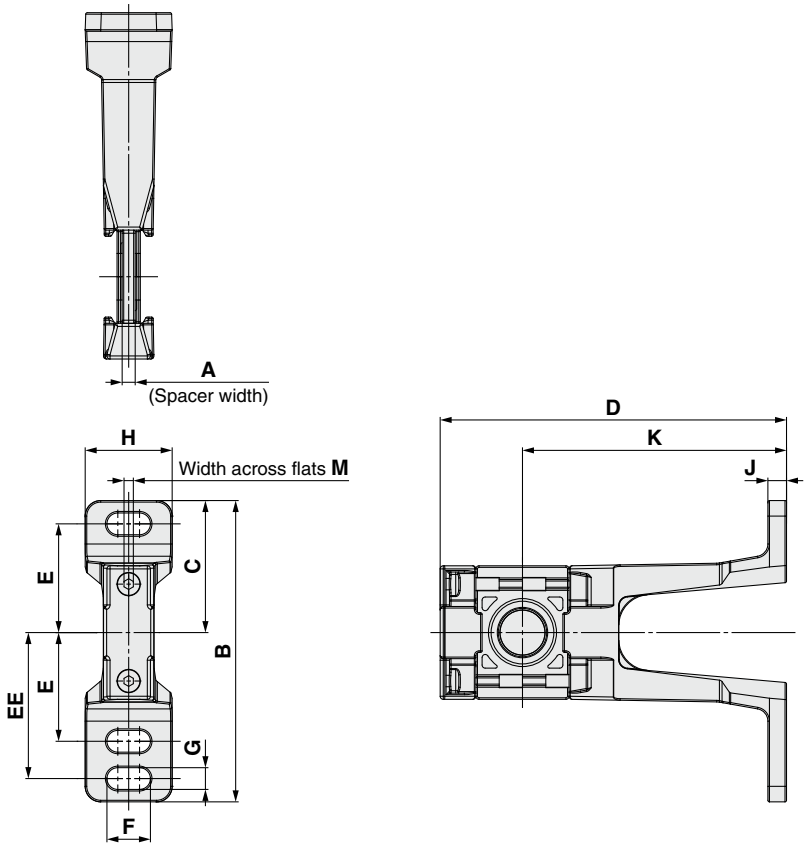

Model	A	B	C	D	E	EE	F	G	H	J	K	M	Applicable size
Y200T-2-D	3.2	97	42.5	106	35	47	14	7	28	6	85	2	**AMS20**
Y300T-2-D	4.2	97	42.5	111.5	35	47	14	7	28	6	85	3	**AMS30**
Y400T-1-D	5.2	115	50	120.5	40	55	18	9	32	7	85	3	**AMS40**
Y600T-2-D	6.2	140	60	145	50	70	20	11	37	8	100	4	**AMS60**

⑩ Silencer

Compact Resin Type

AN20 **AN30, AN40**

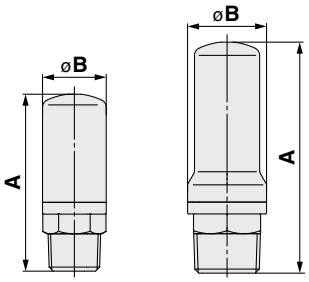

Dimensions [mm]

Model	Port size R	A	B
AN20-02	1/4	45	16.5
AN30-03	3/8	58.5	20
AN40-04	1/2	68	24

Metal Body Type

AN500, 600

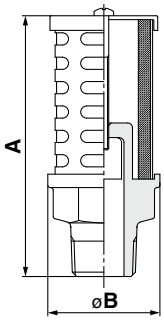

Dimensions [mm]

Model	Port size R	A	B
AN500-06	3/4	107	46
AN600-10	1	127	50

High Noise Reduction Type

AN202 to 402

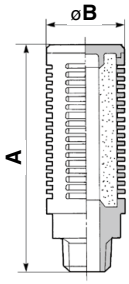

Dimensions [mm]

Model	Port size R	A	B
AN202-02	1/4	64	22
AN302-03	3/8	84	28
AN402-04	1/2	95	34

High Noise Reduction Type

ANA1-06 **ANA1-10**

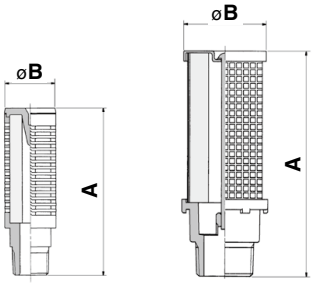

Dimensions [mm]

Model	Port size R	A	B
ANA1-06	3/4	111	46
ANA1-10	1	132	50

Compatibility Chart for Residual Pressure Relief Valve and Silencers

	Silencer	Compact resin type			Metal type		High noise reduction type				
	Model	**AN20-02**	**AN30-03**	**AN40-04**	**AN500-06**	**AN600-10**	**AN202-02**	**AN302-03**	**AN402-04**	**ANA1-06**	**ANA1-10**
	Port size	1/4	3/8	1/2	3/4	1	1/4	3/8	1/2	3/4	1
VP346E	X660 (N.C.)	○	—	—	—	—	○	—	—	—	—
	X661 (N.O.)	○	—	—	—	—	—	—	—	—	—
VP546E	X660 (N.C.)	—	○	—	—	—	—	○	—	—	—
	X661 (N.O.)	—	○	—	—	—	—	—	—	—	—
VP746E	X660 (N.C.)	—	—	○	—	—	—	—	○	—	—
	X661 (N.O.)	—	○	—	—	—	—	—	—	—	—
VP946E	X660 (N.C.)	—	—	—	—	○	—	—	—	—	○
	X661 (N.O.)	—	—	—	○	—	—	—	—	○	—

⑪ Marker (1 sheet, 88 pcs.)

The signal name of I/O device and each unit address can be entered and mounted on each unit.

EX600-ZT1

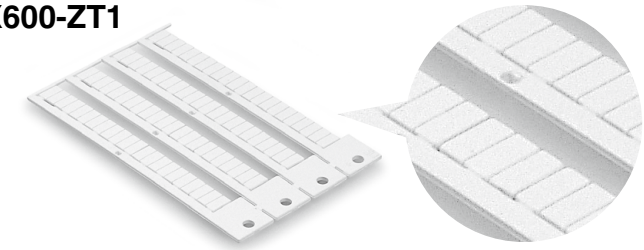

⓬ Wireless Adapter Mounting Bracket

1 round head combination screw (M3 x 10) is included.

EXA1-AB1

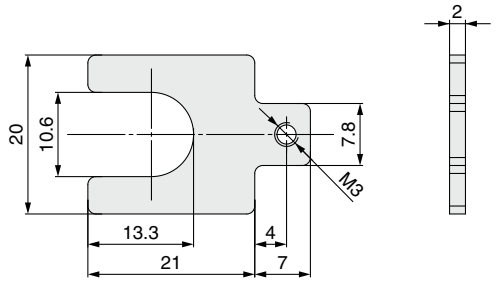

⓭ IO-Link Device Tool License Key

USB dongle

EX9-ZSW-LDT1

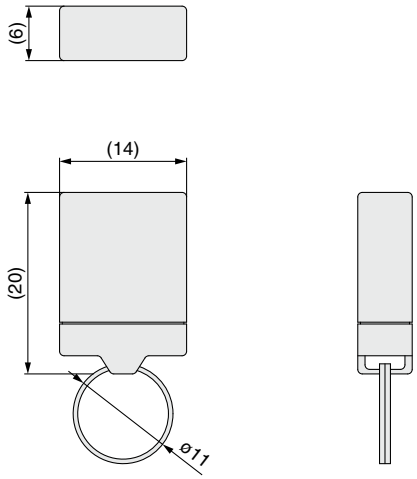

Made to Order

Please contact SMC for detailed dimensions, specifications, and lead times.

Made to Order

1 Without Residual Pressure Relief 3-Port Solenoid Valve Specification

Symbol **X101**

Combination of a standby electro-pneumatic regulator and an air management hub

AMS□A-□□□-□□□□-□LG-X101

For "How to Order," refer to page 7.

Combination of a standby regulator and an air management hub

AMS□B-□□D-□□□□-□L□-X101

For "How to Order," refer to page 13.

2 Without Standby (Electro-Pneumatic) Regulator Specification

Symbol **X102**

Combination of an air management hub and a residual pressure relief 3-port solenoid valve

AMS□A-□□□-□□□□-□L□-X102

For "How to Order," refer to page 7.

Combination of an air management hub and a residual pressure relief 3-port solenoid valve (with soft start-up function)

AMS□B-□□□-□□□□-□L□-X102

∗ Port size: For the "00" type without attachments, the pipe thread type is fixed as "R."

For "How to Order," refer to page 13.

AMS20/30/40/60 Series
Related Products

Compressed Air Preparation Filter Line Filter AFF-D

Series	Port size	Nominal filtration rating [μm]
AFF20 to 60-D	1/8, 1/4, 3/8, 1/2, 3/4, 1	1.0 [Filtration efficiency: 99%]

Air Filter AF-D

Series	Port size	Nominal filtration rating [μm]
AF20 to 60-D	1/8, 1/4, 3/8, 1/2, 3/4, 1	5

Filter Regulator AW-D

Series	Port size	Nominal filtration rating [μm]
AW20 to 60-D	1/8, 1/4, 3/8, 1/2, 3/4, 1	5

AMS20/30/40/60 Series
Specific Product Precautions 1

Be sure to read this before handling the products. Refer to the back cover for safety instructions. For common precautions, refer to the "Operation Manual" on the SMC website: https://www.smcworld.com

Design / Selection

⚠ Warning

1. Confirm the specifications.

Products represented in this catalog are designed only for use in compressed air systems.
Do not operate at flow rates, pressures, temperatures, etc., beyond the range of specifications, as this can cause damage or malfunction. (Refer to the specifications.)
Please contact SMC when using a fluid other than compressed air.
We do not guarantee against any damage if the product is used outside of the specification range.

2. Do not disassemble the product or make any modifications, including additional machining.

Doing so may cause human injury and/or an accident.

⚠ Caution

1. Do not install in places where it can be used as a foothold.

Applying any excessive load such as stepping on the product by mistake or placing a foot on it will cause it to break.

2. If excessive carbon dust is generated by the compressor, it may adhere to the inside of this product and cause it to malfunction.

3. Slight scratches or dirt on the display or the product body will not cause any problems. Please continue to use the product.

Mounting

⚠ Warning

1. Operation manual

Install the products and operate them only after reading the operation manual carefully and understanding its contents. Also, keep the manual where it can be referred to as necessary.

2. Ensure sufficient space for maintenance activities.

When installing the products, allow access for maintenance and inspection.

3. Tighten threads with the proper tightening torque.

When installing the products, follow the listed torque specifications.

4. If air leakage increases or equipment does not operate normally, stop operation.
Check mounting conditions when air and power supplies are connected. Initial function and leakage tests should be performed after installation.

⚠ Caution

1. Do not use a lubricator on the supply side of this product, as doing so may result in a malfunction. When lubrication of terminal equipment is necessary, connect a lubricator on the output side of this equipment.

Piping

⚠ Warning

1. To screw piping material into a component, tighten with the recommended tightening torque while holding the female thread side.

If the tightening torque is insufficient, looseness or seal failure may occur. On the other hand, excess tightening torque can cause damage to the threads. Furthermore, tightening without holding the female thread side can cause damage due to the excess force that is applied directly to the piping bracket.

Recommended Tightening Torque Unit: N·m

Connection thread	1/8	1/4	3/8	1/2	3/4	1
Torque	3 to 5	8 to 12	15 to 20	20 to 25	28 to 30	36 to 38

2. Avoid excessive torsional moment or bending moment other than those caused by the equipment's own weight, as this can cause damage.

Support external piping separately.

3. Piping materials without flexibility, such as steel tube piping, are prone to be affected by excess moment loads and vibrations from the piping side. Use flexible tubing in between to avoid such effects.

⚠ Caution

1. Preparation before piping

Before piping is connected, it should be thoroughly blown out with air (flushing) or washed to remove chips, cutting oil, and other debris from inside the pipe.

2. Winding of sealant tape

When screwing piping or fittings into ports, ensure that chips from the pipe threads or sealing material do not enter the piping. Also, if sealant tape is used, leave 1.5 to 2 thread ridges exposed at the end of the threads.

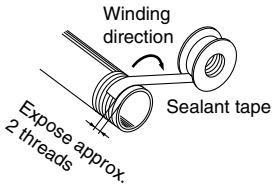

AMS20/30/40/60 Series
Specific Product Precautions 2

Be sure to read this before handling the products. Refer to the back cover for safety instructions. For common precautions, refer to the "Operation Manual" on the SMC website: https://www.smcworld.com

Air Supply

⚠Warning

1. Type of fluids

Please consult with SMC when using the product in applications other than compressed air.

2. Take measures to ensure air quality, such as by installing an aftercooler, air dryer, or water separator.

Compressed air that contains a large amount of drainage can result in the malfunction of this product and other pneumatic equipment. Therefore, take appropriate measures to ensure air quality, such as by providing an aftercooler, air dryer, or water separator.

For compressed air quality, refer to the Air Preparation Equipment Selection Guide (**Web Catalog**).

3. Use clean compressed air.

Do not use compressed air that contains chemicals, synthetic oils that include organic solvents, salt, corrosive gases, etc., as it can cause damage or malfunction.

When synthetic oil is used for the compressor oil, depending on the type of synthetic oil used or on the conditions of use, there may be adverse effects on the resin of the pneumatic equipment or on the seals if the oil is flowed out to the outlet side. The mounting of a main line filter is recommended in such cases.

⚠Caution

1. Ensure that the fluid and ambient temperatures are within the specified range.

When using at low temperatures, drain or moisture could solidify or freeze, causing damage to the seals or equipment malfunction. Therefore, take appropriate measures to prevent freezing.

For compressed air quality, refer to the Air Preparation Equipment Selection Guide (**Web Catalog**).

Operating Environment

⚠Warning

1. Do not use in an atmosphere containing corrosive gases, chemicals, sea water, water, water steam, or where there is direct contact with any of these.

2. Do not expose the product to direct sunlight for an extended period of time.

3. Do not use in a place subject to heavy vibration and/or shock.

4. Do not mount the product in locations where it is exposed to radiant heat.

5. Products compliant with IP65 satisfy the product specifications when mounted properly. Be sure to read the precautions for each product.

Operating Environment

⚠Warning

6. If the product to be returned is contaminated or is possibly contaminated with substances that are harmful to humans, for safety reasons, please contact SMC beforehand and then employ a specialist cleaning company to decontaminate the product. After the decontamination prescribed above has been carried out, submit a Product Return Request Sheet or the Detoxification/Decontamination Certificate to SMC and await SMC's approval and further instructions before attempting to return the item.
Please refer to the International Chemical Safety Cards (ICSC) for a list of harmful substances.
If you have any further questions, please don't hesitate to contact your SMC sales representative.

Maintenance

⚠Warning

1. Maintenance work

If handled improperly, compressed air can be dangerous. Maintenance of pneumatic systems should be performed by a knowledgeable and experienced person.

2. Removal of equipment, and supply/exhaust of compressed air

Before components are removed, first confirm that measures are in place to prevent workpieces from dropping, run-away equipment, etc. Then, cut off the supply pressure and electric power, and exhaust all compressed air from the system using the residual pressure release function.

EXA1 Series
Specific Product Precautions 1

Be sure to read this before handling the products. Refer to the back cover for safety instructions. For common precautions, refer to the "Operation Manual" on the SMC website: https://www.smcworld.com

Design / Selection

⚠ Warning

1. Do not use beyond the specification range.

Using beyond the specification range may result in a fire, malfunction, or damage to the system.
Check the specifications before operation.

⚠ Caution

1. When applicable to UL, use a Class 2 power supply unit which is UL1310 compliant for direct current power supply.

2. Use within the specified voltage range.

Using beyond the specified voltage range is likely to cause damage product or malfunction.

3. Do not remove the name plate.

Improper maintenance or incorrect use of the Operation Manual may lead to equipment failure or malfunction. Also, there is a risk of losing conformity with safety standards.

4. Beware of inrush currents when the power supply is turned on.

Some connected loads can apply an initial charge current which will trigger the over current protection function, causing the product to malfunction.

Mounting

⚠ Warning

1. When handling and assembling products:

- **Do not apply excessive force to the product when disassembling.**

  The connecting parts of the product are firmly joined with seals.

- **When joining units, take care not to get your fingers caught between the products.**

  Injury may result.

2. Do not drop, bump, or apply excessive impact to the product.

Doing so may result in damage, equipment failure, or malfunction.

Wiring

⚠ Caution

1. Provide grounding to improve noise immunity.

Perform the dedicated grounding separate from the inverter of the drive system and minimize the grounding distance from the product.

2. Avoid repeatedly bending or stretching the cable and applying heavy objects or force to it.

Wiring where repeated bending and tensile stress are applied to the cable may result in circuit breakage.

3. Avoid miswiring.

If miswired, there is a danger of malfunction or damage to the product.

4. Do not wire while energizing the product.

There is a danger of malfunction or damage to the product or input/output device.

5. Avoid wiring the power line and high-voltage line in parallel.

Signal line noise or surge from the power line or high-pressure line could cause a malfunction.
Wiring of the product or input/output device and the power line or high-voltage line should be separated from each other.

6. Check the wiring insulation.

Defective insulation (contact with other circuits, improper insulation between terminals, etc.) may cause damage to the product or input/output device due to excessive voltage or current.

7. When the product is installed in machinery/equipment, provide adequate protection against noise by using noise filters, etc.

Noise in signal lines may cause a malfunction.

8. When connecting wires, prevent the entry of water, solvent, or oil from the connector section.

Failure to do so may result in damage, equipment failure, or malfunction.

9. Avoid wiring patterns in which excessive stress is applied to the connector.

Failure to do so may result in equipment failure or malfunction due to contact failure.

EXA1 Series
Specific Product Precautions 2

Be sure to read this before handling the products. Refer to the back cover for safety instructions. For common precautions, refer to the "Operation Manual" on the SMC website: https://www.smcworld.com

Operating Environment

⚠ Warning

1. Do not use in atmospheres containing inflammable or explosive gases.

Use in such atmospheres is likely to cause a fire or explosion. This product is not explosion proof.

⚠ Caution

1. Provide adequate protection when operating in locations such as the following.

Failure to do so may cause a malfunction or equipment failure. The effect of countermeasures should be checked in individual equipment and machines.

1) Where noise is generated by static electricity, etc.
2) Where there is a strong electric field
3) Where there is a danger of exposure to radiation
4) When in close proximity to power lines or high-voltage lines

2. Do not use in environments where oil and chemicals are used.

Operating in environments where coolants, cleaning solvents, various oils, or chemicals are present may cause adverse effects (damage, malfunction, etc.) to the product even within a short period of time.

3. Do not use in environments where the product could be exposed to corrosive gases or liquids.

Use in such environments may cause product damage or malfunction.

4. Do not use in locations with sources of surge generation.

Installation of the product in an area around equipment (electromagnetic lifters, high-frequency induction furnaces, welding machines, motors, etc.) which generates large surge voltages could cause an internal circuitry element of the product to deteriorate or result in damage. Implement countermeasures against the surge from the generating source, and avoid contact between the lines.

5. The product is CE/UKCA marked but not immune to lightning strikes. Take measures against lightning strikes in your system.

6. Keep dust, wire scraps, and other foreign matter from entering the product.

Such materials may cause equipment failure or malfunction.

7. Do not use in places where there are cyclic temperature changes.

When the cyclic temperature exceeds normal temperature changes, the internal product is likely to be adversely affected.

Adjustment / Operation

⚠ Warning

1. Do not perform operation or setting with wet hands.

There is a risk of electrical shock.

⚠ Caution

1. Use a watchmaker's screwdriver with a thin blade for the setting switch.

When setting the switch, do not touch any unrelated parts. This may cause parts damage or malfunction due to a short circuit.

2. Perform appropriate setting for the operating conditions.

Failure to do so could result in malfunction.
Refer to the Operation Manual for details on setting each switch.

3. For details on programming and address setting, refer to the manual from the PLC manufacturer.

The programming content related to the protocol is designed by the manufacturer of the PLC used.

ITV2050 to 3050-X399
Specific Product Precautions

Be sure to read this before handling the products. Refer to the back cover for safety instructions. For common precautions, refer to the "Operation Manual" on the SMC website: https://www.smcworld.com

Handling

⚠ Caution

1. **If the power supply to this product is turned off due to a power failure during operation, the output on the secondary side depends on the specifications.**
   Normally closed specification:
   The output pressure is held.
   Normally open specification:
   Supply pressure minus 0.1 MPa or more pressure continues to flow out.
2. **If supply pressure to this product is interrupted or shut off, while the power is still on, the internal solenoid valve will continue to operate and a humming noise will be generated.**
   Since it may greatly affect the life of the built-in solenoid valve, when shutting off the supply pressure, turn off the power of this product or set the solenoid valve stop time.
3. **This product is adjusted for each specification at the time of shipment from the factory. Avoid careless disassembly or removal of parts, as failure to do so may result in a malfunction.**
4. **When connecting the cable to this product, turn the lock ring of the cable. If a portion other than the lock ring of the cable is turned, it may damage the connector on the body. Turn the lock ring by hand without using a tool.**
5. **The right angle cable does not rotate and is limited to only one entry direction. If the right angle cable is rotated forcibly, the cable may be broken or damaged, or may damage the connector on the body.**
6. **Specifications on page 25 are in case of static environment. Pressure may fluctuate when air is consumed at the output side.**

AR20S to 50S Series
Specific Product Precautions 1

Be sure to read this before handling the products. Refer to the back cover for safety instructions. For common precautions, refer to the "Operation Manual" on the SMC website: https://www.smcworld.com

Design / Selection

⚠ Warning

1. **Provide ventilation when using this product in a confined area, such as in a closed control panel. For example, install a ventilation opening, etc., in order to prevent pressure from increasing inside of the confined area and to release the heat generated by this product.**
2. **Polyacetal resin parts are used for the exterior. Organic solvents including thinner, acetone, alcohol and ethylene chloride; chemicals including sulphuric acid, nitric acid and hydrochloric acid; cutting oil, synthetic oils, ester-based compressor oil, alkali, kerosene, gasoline, lock material of screw are harmful. Do not use the product where these are present.**

⚠ Caution

1. **Pay attention to the leakage voltage. Particularly when using a C-R element (surge voltage suppressor) to protect the switching element, take note that leakage current will flow through the C-R element, thus increasing leakage voltage.**

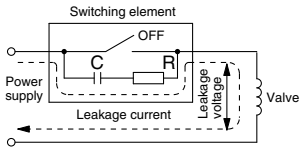

AC coil is 8% or less of the rated voltage.
DC coil is 3% or less of the rated voltage.

2. **Use caution when operating at low temperatures. Although this product can be operated at temperature as low as 0°C, measures should be taken to avoid solidifying or freezing drainage or moisture, etc.**
3. **Surge voltage suppressor**

   The surge voltage suppressor built into the valve is intended to protect the output contacts so that the surge generated inside valve does not adversely affect the output contacts. Therefore, if an overvoltage or overcurrent is received from an external peripheral device, the surge voltage protection element inside the valve is overloaded, causing the element to break. In the worst case, the breakage causes the electric circuit to enter short-circuit status. If energizing continues while in this state, a large current flows. This may cause secondary damage to the output circuit, external peripheral device, or valve, and may also cause a fire. So, take appropriate protective measures, such as the installation of an overcurrent protection circuit in the power supply or a drive circuit to maintain a sufficient level of safety.

Adjustment

⚠ Warning

1. **Set the regulator while verifying the displayed values of the inlet and outlet pressure gauges. Turning the regulator knob excessively can cause damage to the internal parts.**
2. **Do not use tools on the pressure regulator knob as this may cause damage. It must be operated manually.**

⚠ Caution

1. **When setting the pressure, the inlet pressure must be supplied after the pilot valve is powered.**
2. **Be sure to unlock the knob before adjusting the pressure and lock it after setting the pressure. Failure to follow this procedure can cause damage to the knob and the outlet pressure may fluctuate.**
   - Pull the pressure regulator knob to unlock. (You can visually verify this with the "orange mark" that appears in the gap.)
   - Push the pressure regulator knob to lock. When the knob is not easily locked, turn it left and right a little and then push it (when the knob is locked, the "orange mark", i.e., the gap will disappear).

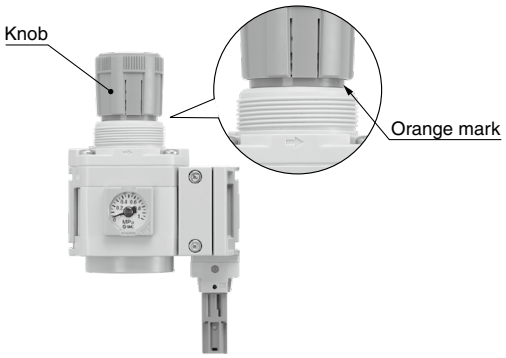

AR20S to 50S Series
Specific Product Precautions 2

Be sure to read this before handling the products. Refer to the back cover for safety instructions. For common precautions, refer to the "Operation Manual" on the SMC website: https://www.smcworld.com

Wiring

⚠ Warning

1. **The solenoid valve is an electrical product. For safety, install an appropriate fuse and circuit breaker before use.**

Operating Environment

⚠ Warning

1. **When the solenoid valve is mounted in a control panel or it's energized for a long period of time, make sure the ambient temperature is within the specifications of the valve.**

Maintenance

⚠ Warning

1. **Low-frequency operation**

   Valves should be operated at least once every 30 days to prevent malfunction. (Use caution regarding the air supply.)

2. **Manual override**

   When a manual override is operated, connected equipment will be actuated. Operate only after safety is confirmed.

- **Non-locking push type**

  Push down on the manual override with a small screwdriver, etc., until it stops. Release the screwdriver and the manual override will return.

- **Push-turn locking lever type**

  When locking the manual override, be sure to push it down before turning. Do not apply excessive torque as turning without first pushing it down can cause damage to the manual override and trouble such as air leakage. (0.1 N·m)

VP346E/546E/746E/946E-X660/X661
Specific Product Precautions 1

Be sure to read this before handling the products. Refer to the back cover for safety instructions. For common precautions, refer to the "Operation Manual" on the SMC website: https://www.smcworld.com

Design / Selection

⚠ Warning

1. Resumption after a long period of holding time

When resuming operation after a long period of holding time, there are cases in which, regardless of whether the product is in an ON or OFF state, there is a delay in the initial response time due to adhesion. Conducting several cycles of running-in operation will solve this problem. Please consider implementing this before resumption.

⚠ Caution

1. Surge voltage suppressor

1) The surge voltage suppressor built into the valve is intended to protect the output contacts so that the surge generated inside valve does not adversely affect the output contacts. Therefore, if an overvoltage or overcurrent is received from an external peripheral device, the surge voltage protection element inside the valve is overloaded, causing the element to break. In the worst case, the breakage causes the electric circuit to enter short-circuit status. If energizing continues while in this state, a large current flows. This may cause secondary damage to the output circuit, external peripheral device, or valve, and may also cause a fire. So, take appropriate protective measures, such as the installation of an overcurrent protection circuit in the power supply or a drive circuit to maintain a sufficient level of safety.

2) If a surge protection circuit contains nonstandard diodes, such as Zener diodes or varistor, a residual voltage that is in proportion to the protective circuit and the rated voltage will remain. Therefore, take into consideration the surge voltage protection of the controller.

2. For the pilot EXH port (breathing hole)

If the valve pilot EXH port (breathing hole) is restricted extremely or blocked, abnormal operation of the valve may occur.

Piping

⚠ Caution

1. Silencer mounting

For handling of silencers, refer to the AN series/specific product precautions.

Handling

⚠ Warning

1. Built-in check valve

A check valve is built into the pilot flow path to suppress the pilot pressure drop due to pressure fluctuation on the inlet side. When replacing pilot valve, please be careful for residual pressure between check valve and pilot valve.

Adjustment

⚠ Caution

1. Soft start-up function

When the soft start-up function is selected, the initial pressure of the pneumatic system can be increased gradually.

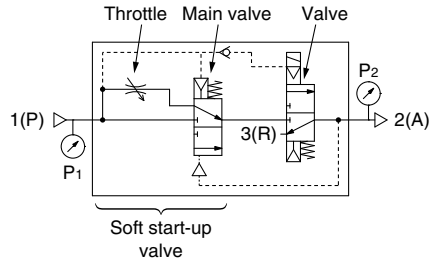

Output Pressure (P_2) vs Time Graph

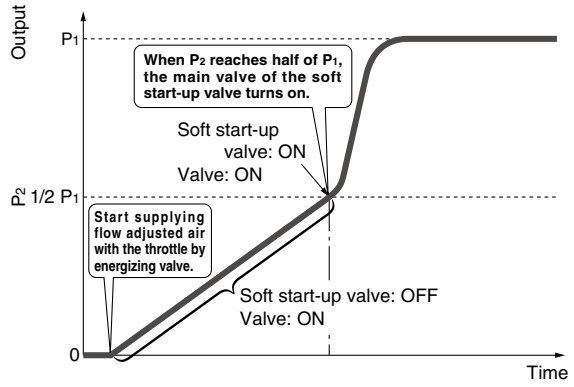

Turn the needle of the throttle valve to the left from fully closed (as shipped) to adjust the initial speed of the drive equipment on the outlet side.

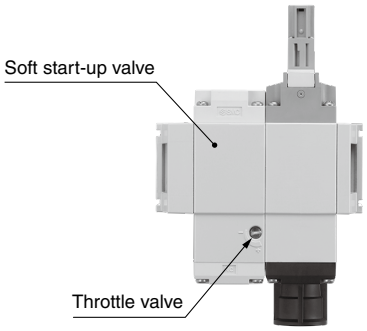

VP346E/546E/746E/946E-X660/X661
Specific Product Precautions 2

Be sure to read this before handling the products. Refer to the back cover for safety instructions. For common precautions, refer to the "Operation Manual" on the SMC website: https://www.smcworld.com

Wiring

⚠ Warning

1. **The solenoid valve is an electrical product. For safety, install an appropriate fuse and circuit breaker before use.**

Operating Environment

⚠ Warning

1. **When the solenoid valve is mounted in a control panel or it's energized for a long period of time, make sure the ambient temperature is within the specifications of the valve.**

Maintenance

⚠ Warning

1. **Low-frequency operation**

   Valves should be operated at least once every 30 days to prevent malfunction. (Use caution regarding the air supply.)

2. **Manual override**

   When a manual override is operated, connected equipment will be actuated. Operate only after safety is confirmed.

⚠ Safety Instructions

These safety instructions are intended to prevent hazardous situations and/or equipment damage. These instructions indicate the level of potential hazard with the labels of **"Caution," "Warning"** or **"Danger."** They are all important notes for safety and must be followed in addition to International Standards (ISO/IEC)*1), and other safety regulations.

⚠ Danger : **Danger** indicates a hazard with a high level of risk which, if not avoided, will result in death or serious injury.

⚠ Warning: **Warning** indicates a hazard with a medium level of risk which, if not avoided, could result in death or serious injury.

⚠ Caution: **Caution** indicates a hazard with a low level of risk which, if not avoided, could result in minor or moderate injury.

*1) ISO 4414: Pneumatic fluid power - General rules and safety requirements for systems and their components
ISO 4413: Hydraulic fluid power - General rules and safety requirements for systems and their components
IEC 60204-1: Safety of machinery - Electrical equipment of machines - Part 1: General requirements
ISO 10218-1: Robots and robotic devices - Safety requirements for industrial robots - Part 1:Robots
etc.

⚠ Warning

1. The compatibility of the product is the responsibility of the person who designs the equipment or decides its specifications.

Since the product specified here is used under various operating conditions, its compatibility with specific equipment must be decided by the person who designs the equipment or decides its specifications based on necessary analysis and test results. The expected performance and safety assurance of the equipment will be the responsibility of the person who has determined its compatibility with the product. This person should also continuously review all specifications of the product referring to its latest catalog information, with a view to giving due consideration to any possibility of equipment failure when configuring the equipment.

2. Only personnel with appropriate training should operate machinery and equipment.

The product specified here may become unsafe if handled incorrectly. The assembly, operation and maintenance of machines or equipment including our products must be performed by an operator who is appropriately trained and experienced.

3. Do not service or attempt to remove product and machinery/equipment until safety is confirmed.

1. The inspection and maintenance of machinery/equipment should only be performed after measures to prevent falling or runaway of the driven objects have been confirmed.
2. When the product is to be removed, confirm that the safety measures as mentioned above are implemented and the power from any appropriate source is cut, and read and understand the specific product precautions of all relevant products carefully.
3. Before machinery/equipment is restarted, take measures to prevent unexpected operation and malfunction.

4. Our products cannot be used beyond their specifications. Our products are not developed, designed, and manufactured to be used under the following conditions or environments. Use under such conditions or environments is not covered.

1. Conditions and environments outside of the given specifications, or use outdoors or in a place exposed to direct sunlight.
2. Use for nuclear power, railways, aviation, space equipment, ships, vehicles, military application, equipment affecting human life, body, and property, fuel equipment, entertainment equipment, emergency shut-off circuits, press clutches, brake circuits, safety equipment, etc., and use for applications that do not conform to standard specifications such as catalogs and operation manuals.
3. Use for interlock circuits, except for use with double interlock such as installing a mechanical protection function in case of failure. Please periodically inspect the product to confirm that the product is operating properly.

⚠ Caution

We develop, design, and manufacture our products to be used for automatic control equipment, and provide them for peaceful use in manufacturing industries.
Use in non-manufacturing industries is not covered.
Products we manufacture and sell cannot be used for the purpose of transactions or certification specified in the Measurement Act.
The new Measurement Act prohibits use of any unit other than SI units in Japan.

Limited warranty and Disclaimer/ Compliance Requirements

The product used is subject to the following "Limited warranty and Disclaimer" and "Compliance Requirements".
Read and accept them before using the product.

Limited warranty and Disclaimer

1. The warranty period of the product is 1 year in service or 1.5 years after the product is delivered, whichever is first.*2)
   Also, the product may have specified durability, running distance or replacement parts. Please consult your nearest sales branch.
2. For any failure or damage reported within the warranty period which is clearly our responsibility, a replacement product or necessary parts will be provided.
   This limited warranty applies only to our product independently, and not to any other damage incurred due to the failure of the product.
3. Prior to using SMC products, please read and understand the warranty terms and disclaimers noted in the specified catalog for the particular products.

***2) Vacuum pads are excluded from this 1 year warranty.**
A vacuum pad is a consumable part, so it is warranted for a year after it is delivered.
Also, even within the warranty period, the wear of a product due to the use of the vacuum pad or failure due to the deterioration of rubber material are not covered by the limited warranty.

Compliance Requirements

1. The use of SMC products with production equipment for the manufacture of weapons of mass destruction (WMD) or any other weapon is strictly prohibited.
2. The exports of SMC products or technology from one country to another are governed by the relevant security laws and regulations of the countries involved in the transaction. Prior to the shipment of a SMC product to another country, assure that all local rules governing that export are known and followed.

Revision History

Edition B
* EtherCAT has been added as a communication protocol.
* The number of pages has been increased from 64 to 48.

Edition C
* EtherCAT has been added as a communication protocol.
* Made to order added.
  - Without residual pressure relief 3-port solenoid valve specification (-X101)
  - Without standby regulator specification (-X102)
* The external appearance (shape and color) of the VP946E-X661 series residual pressure relief 3-port solenoid valve has been changed.
* UL certification has been acquired.
* The wireless adapter model has been changed, and the mounting bracket model has been corrected.

⚠ Safety Instructions Be sure to read the "Handling Precautions for SMC Products" (M-E03-3) and "Operation Manual" before use.

SMC Corporation
Akihabara UDX 15F,
4-14-1, Sotokanda, Chiyoda-ku, Tokyo 101-0021, JAPAN
Phone: 03-5207-8249 Fax: 03-5298-5362
https://www.smcworld.com